PHILIPS TECHNICAL LIBRARY

D. J. W. SJOBBEMA

USING TRANSISTORS

THIRD ENLARGED EDITION

D. J. W. SJOBBEMA

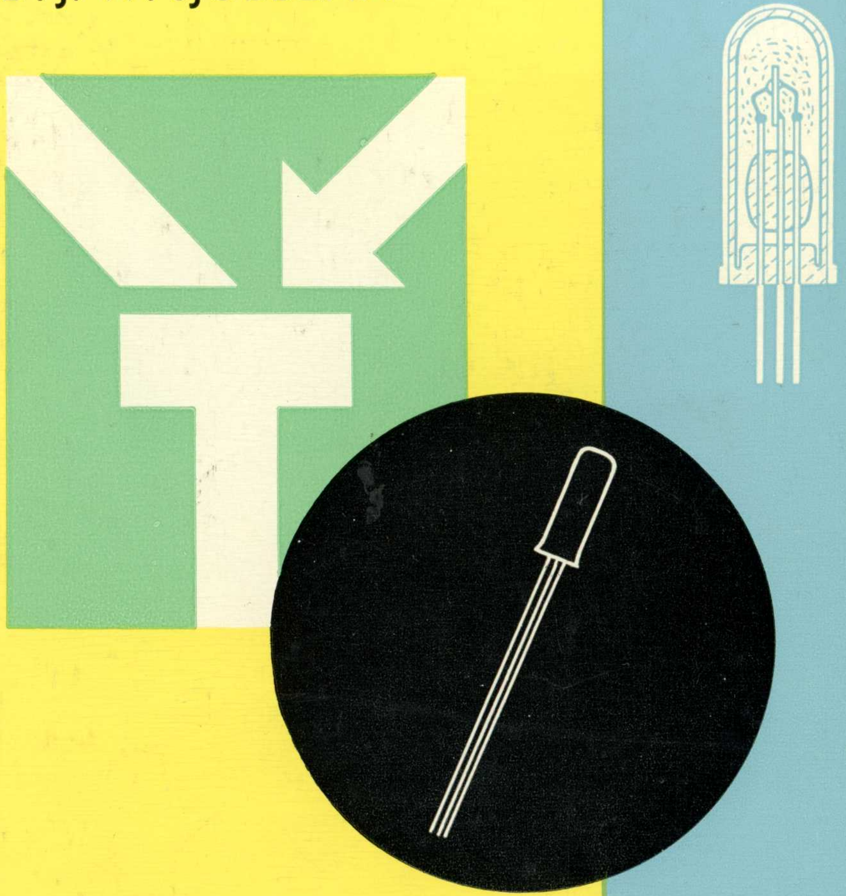

USING TRANSISTORS

POPULAR SERIES

PHILIPS' TECHNICAL LIBRARY

2.50
/

USING TRANSISTORS

USING TRANSISTORS

BY

D. J. W. SJOBBEMA

1964

POPULAR SERIES

PHILIPS TECHNICAL LIBRARY

Translated by P. J. Arthern, London

Publisher's note :

This book contains viii + 131 pages and 142 illustrations

Other editions of this book in Philips Technical Library in the
French, German, Spanish, Dutch and Danish language

U.D.C. Nr. 621.318.57 : 621.382.3

First published in 1960

Second enlarged edition 1961
Reprinted 1961
Reprinted 1963
Third enlarged edition 1964

Printed in The Netherlands

FOREWORD

Ten years after the announcement of its discovery, the transistor has ensured for itself an extremely important place in electronic techniques. This is due, to no small extent, to its special characteristics, which in many cases make the use of the transistor preferable to that of the thermionic valve. There are even applications in which the transistor has already completely or partially displaced the thermionic valve, in portable radio receivers, computers and satellites for example. The result is that a continually increasing number of technicians are being confronted with the transistor, either directly or indirectly.

The principal object of this book is thus to introduce technicians and students to the transistor, its specific characteristics and the present state of circuit techniques. With this object in view, the material is approached from the practical angle, so that the reader will find a number of hints on the construction and repair of transistor circuits, but no detailed mathematical treatment.

I should like to express my gratitude to Mr. P. J. Arthern for his English translation.

D. J. W. SJOBBEMA

November 1959.

FOREWORD TO THE FOURTH EDITION

In the light of the rapid development of transistor techniques, I have not only revised the examples of chapter IX but also included an appendix giving a survey of certain other much used electronic components and a sketch of the manufacturing techniques in use at present.

D. J. W. SJOBBEMA

September 1964.

CONTENTS

CHAPTER 1

INTRODUCTION

In 1947, the American physicists Bardeen and Brattain, both working in the Bell Telephone Company's laboratories, demonstrated a new method of amplifying an electric signal. They employed a new circuit element with three connections — a crystal amplifier which they called a "transistor". The word "transistor" was obtained by combining the italicised parts of the words *trans*former and res*istor*. The reader will appreciate the significance of this in the following chapters.

The operation of these amplifiers is based on certain properties of semiconductors. Up to the present, the materials selected for this purpose have, apart from a few exceptions, been particular types of germanium and silicon.

The first type of crystal amplifier, as made public by the above physicists, was a so-called point-contact transistor. A transistor of this type is shown in Fig. 1 and consists of a wafer of *N*-germanium (*B*) to which two contact springs (*E* and *C*) are applied. (The meaning of "*N*-germanium" will be explained in the next chapter). These contacts must be extremely thin (diameter approximately 50 microns) and resilient, and must be spaced about 200 microns apart. The complete arrangement looks like two germanium diodes at a very small distance from each other, constructed with the germanium wafer in common. From this point-contact transistor, which hardly any transistor manufacturer still produces, the junction transistor has been developed. The transistors being used for various purposes at the present time are all junction transistors. (The point contact transistor was able to maintain its position as an r.f. amplifier for some time, but with the arrival of the drift transistor it has had to retire from this field too.)

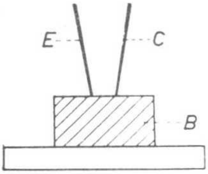

Fig. 1

The construction of the junction transistor

Fig. 2*a* shows a cross-section of a junction transistor. The actual transistor element, in which the signal is amplified, consists of a thin wafer of *N*-germanium (*A* in Fig. 2*a*), about 0.2 mm thick, which is soldered to a support. *N*-germanium is very pure germanium which has been contaminated to a certain degree by means of a particular material. There are pellets of indium (*B* and *C*) attached to each side of this germanium wafer. When the assembly, that is, the indium pellets and the wafer of *N*-germanium, is raised to a certain temperature, some of the indium penetrates into the germanium, producing another type of germanium—*P*-germanium. The *N*-germanium in fact becomes contaminated by the indium. The thickness of these layers of *P*-germanium depends, amongst other things, on the temperature at which the diffusion process takes place, and the time for which it continues. The layers of *P*-germanium will clearly become thicker with increasing temperature, and with longer diffusion times.

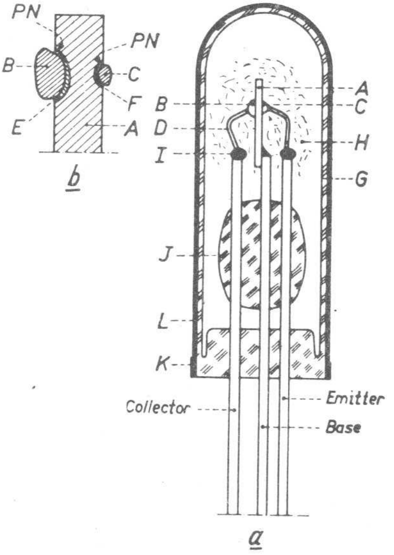

A — N-Germanium (base)
B — Indium pellet (collector)
C — Indium pellet (emitter)
D — Contacts
E — P-germanium
F — P-germanium
G — Glass bulb
H — Silicon grease
I — Soldered joints
J — Glass bead
K — Red dot
L — Black lacquer coating

Fig. 2

Both types of germanium will be examined in more detail in chapter II.

Working from left to right, the actual transistor element (Fig. 2b) thus consists of a pellet of indium (*B*), an extremely thin layer of *P*-germanium (*E*), a layer of *N*-germanium (*A*), another layer of *P*-germanium (*F*) and finally another indium pellet (*C*). This type of transistor is known as a *PNP* transistor, as it consists of the three layers, *P*-germanium, *N*-germanium and *P*-germanium.

For the sake of completeness, it should be mentioned that there are also transistors in which the sequence is different. There is first a layer of *N*-germanium, then a layer of *P*-germanium and finally a layer of N-germanium. This type of transistor is known as an *NPN* transistor.

The actual operation of the transistor takes place in this *PNP*- or *NPN*-element, which is housed in a glass bulb (*G*) or a metal cap, in order to protect it against damage, and the effects of moisture. The glass bulb or metal cap is filled with silicon grease (*H*), which has a three-fold function, i.e.

a) To remove the heat developed in the transistor element.

b) To ensure a firm construction.

c) To protect the transistor element against humidity.

The various properties of semiconductors, and therefore of germanium, change with changes in the amount of energy being conveyed to the material. Heat and light are forms of energy, so the characteristics of a transistor will vary with the amount of light and heat conveyed to it.

The first effect, that of sensitivity to light, means that if the transistor element is housed in a glass bulb, the bulb must be coated with black lacquer, in order to prevent the entry of light.

The second effect, that of sensitivity to heat, also concerns the heat developed in the transistor, and the removal of this heat, and so depends, amongst other things, on the operating conditions, position and method of mounting of the transistor, and on the ambient temperature.

The transistor compared with the thermionic valve

If a transistor is compared with a thermionic valve, the following differences are at once seen to be in the transistor's favour:

1. A transistor does not have a heater for producing thermal emission. This means a not inconsiderable increase in the efficiency of the circuit. As a guide, it may be mentioned that in some types of valve, the heater power constitutes almost 80 % of the total power consumption.

2. As a transistor does not make use of thermal emission, it will operate immediately the circuit is switched on (No heating-up time, as is the case with thermionic valves).

3. Because of its compact construction, a transistor is much more resistant than a thermionic valve to shock and vibrations. (Think of the vacuum inside a thermionic valve, which makes it very vulnerable).

4. A transistor works with low operating voltages, which means that no high-tension source is required, as is the case for most thermionic valves.

5. The dimensions. Many types of transistor have a volume less than 1 c.c.

6. The weight, which is often less than 1 gram.

7. The operating life of a transistor is practically unlimited.

Against all these points, which favour the transistor, there are also a number of points where the transistor is at a disadvantage in comparison with the classical thermionic valve. These are:

1. The transistor's high sensitivity to temperature, with reference to temperature fluctuations as well as to the maximum permissible temperature. For germanium transistors, the maximum temperature is about 75° C.

2. Noise, which is louder in a transistor than in a thermionic valve under the same conditions.

The above points show that a transistor is particularly suitable for apparatus which is exposed to shocks and vibrations (airborne equipment, and car radios, for example), which has to have an economical power consumption (hearing aids and mobile apparatus), and which must be easily transportable. In connection with the last point, think of the saving in the weight of heavy batteries, due to operation with low voltages.

Following the above summary of only a few of the possible applications of the transistor (in which it has already wholly or partially displaced the thermionic valve), we will make a more detailed study of the different types of germanium.

CHAPTER II

BASIC PHYSICAL IDEAS

The concept of "semiconductors"

In the previous chapter, we have already mentioned semiconductors a number of times, including germanium in particular, which is one of these semiconductors.

We are now going to investigate what is in fact meant by a semiconductor, and what the specific characteristics of these substances are.

If the resistivities of a large number of substances were measured, and the results were plotted in order of magnitude, the graph which would be obtained would be like Fig. 3 which also shows a division into conductors, semiconductors and insulators. It will be seen at once that the resistivities of the materials classified as conductors (metals), do not differ very much. The resistivity of mercury, the worst conductor, is only 100 times that of silver, the best conductor. This is in contrast to the region occupied by the insulators, where the resistivity of quartz is 10^9 times that of marble. The first question which arises is whether the division into conductors, semiconductors and insulators is arbitrary, or whether it is based on specific characteristics of the different substances. In order to answer this question, the resistivity of the different substances is measured again, but with this difference, that the temperature of each substance is increased during the measurement. It is found that the conductors all have a common characteristic, i.e. that the resistivity increases in direct

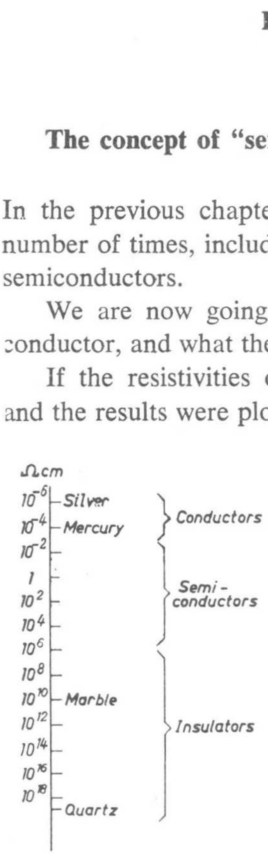

Fig. 3

proportion to the temperature (extremely high and extremely low temperatures being left out of consideration here). Fig. 4 shows this relationship in graphical form.

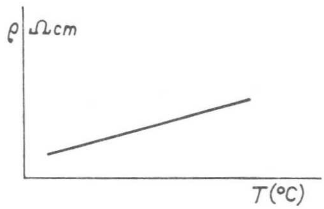

Fig. 4

Insulators, on the other hand, are found to react quite differently. If the temperature is increased, the resistivity of the material does not change at all until a certain temperature is reached, when its value suddenly drops sharply. See Fig. 5. These tests with insulators also show that an insulator of better quality, i.e. one which has a higher resistivity, requires a higher temperature to bring about the sharp drop in resistivity. As a result, this temperature is considerably lower for marble than it is for quartz (about 1000 to 2000 °C). Semiconductors, as the name indicates, act partly as insulators and partly as conductors.

Fig. 6 shows the connection between resistivity and temperature for the type of material used for making transistors. It can be seen from the figure that the material behaves as an insulator at first, then takes on the character of a conductor and after that, at a still higher temperature, behaves as an insulator again. It may be noted that there are also semiconductors which behave exactly like insulators, except that the temperature at which the resistivity drops steeply is much lower than the corresponding temperature for insulators. Pure germanium is an example of this type of semiconductor, sometimes termed an intrinsic semiconductor.

In order to be able to explain the above behaviour of conductors, semi-

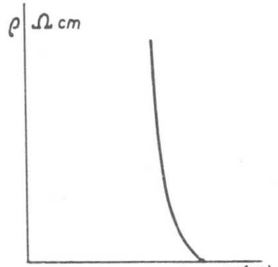

Fig. 5

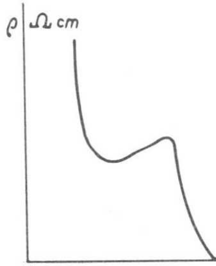

Fig. 6

conductors and insulators, we must study the structure of the various substances in more detail.

Atomic linkages

It is assumed that the reader knows that all materials are built up from molecules. A molecule is the smallest particle of a given substance which still has the properties of that substance. A molecule of water, therefore, is the smallest particle of water which still has the properties of water. Such a molecule is composed of still smaller particles, called atoms. The molecule of water, for example, is built up from two hydrogen atoms and one oxygen atom, i.e. a total of three atoms.

Research has shown that all the substances known to man are built up from 93 different types of atom. (Modern nuclear physics has succeeded in producing a few additional types of atom, but these do not appear naturally on the earth).

Atoms of all types have one common characteristic however: they all consist of a positively charged nucleus, round which one or more electrons move with very high velocity.

Fig. 7 shows a hydrogen atom. This atom, the simplest which there is, consists of a positively charged nucleus (the proton) with one electron moving round it. The hydrogen atom is electrically neutral, which means that the positive charge of the nucleus must equal the negative charge of the electron moving round it.

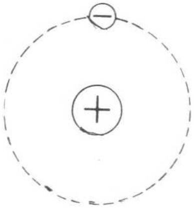

Fig. 7

The structure of the germanium atom is much more complicated, with 32 electrons moving round the nucleus. Consequently, the nucleus has a positive charge equal to that of 32 electrons, because the germanium atom, like every intact atom, is electrically neutral.

In what follows, we shall confine our attention to the electrons which move round the nucleus, as it is found that these electrons are responsible, to a considerable extent, for the effects noted in the previous section.

The electrons in question, which move round the nucleus of the germanium (Ge) atom, can be grouped according to the energy which they possess. In the Ge-atom, the 32 electrons are divided into 4 groups, usually known as shells.

The first group (the *K* shell), comprising the electrons with the least energy, contains 2 electrons. The second group (the *L* shell) contains 8 electrons, the third group (the *M* shell) 18 electrons and the fourth group (*N* shell) 4 electrons. These points are illustrated in Fig. 8.

The hydrogen atom which we have already discussed possesses one electron, whose energy puts it in the *K* shell. Considerations outside the scope of this book show that the *K* shell is complete with two electrons, and further, that a shell which lacks one or more electrons (an "incomplete" shell), will try to make up the number from outside. There are a number of ways in which this can be done, but we are only interested in one possibility, that of the covalent bond. We have already seen that the hydrogen atom only has one electron missing from the *K* shell. One way of completing the shell is by a covalent bond i.e. the hydrogen atom combines with another hydrogen atom, giving the situation illustrated in Fig. 9. There are now two electrons moving round each hydrogen nucleus, its own electron and the electron from the atom with which it has combined. For both atoms, the *K* shell is now full, resulting in a stable bond. Neither of the atoms feels any tendency to enter into combination with other atoms.

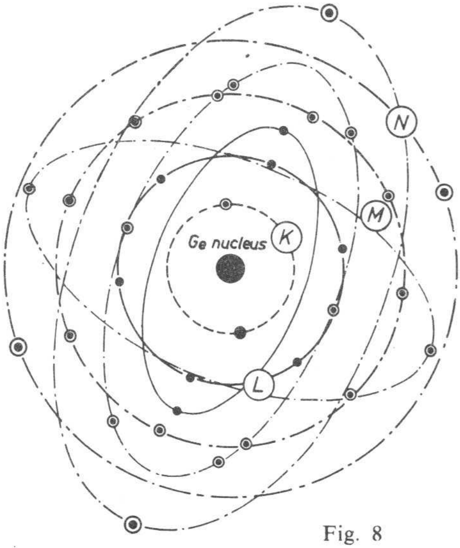

Fig. 8

Fig. 9

A complete shell is also termed a "rare gas" shell, as an atom whose shells are complete shows, like an atom of one of the rare gases, no tendency to combine with other atoms.

Some examples of these rare gases are:

Helium, which possesses 2 electrons (complete *K* shell);
Neon, possessing 10 electrons (2 + 8), (complete *K* and *L* shells);
Argon, with 18 electrons (2 + 8 + 8); and
Crypton, with 36 electrons (2 + 8 + 18 + 8).

Germanium has 32 electrons, and is thus 4 electrons short of having a rare gas structure in the *N* shell. This means that the germanium atom will combine with 4 neighbouring atoms, in order to reach the stable condition with 36 electrons.

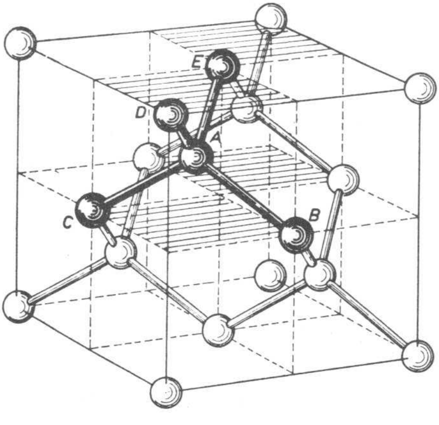

Fig. 10

It is found that germanium atoms combine together in a certain pattern, as shown in Fig. 10. In this figure, the germanium atoms are represented by small spheres, while the bonds between atoms, represented by rods, are each formed by two electrons, i.e. one from each germanium atom. In this way, atom *A* is connected to atoms *B, C, D* and *L*, lying one at each corner of an imaginary cube. Atom *A* itself is at the centre of gravity of the cube. The crystal structure of germanium consists of a similar regularly repeated pattern of atoms.

At the absolute zero of temperature (—273 °C), all the valency electrons, i.e. the electrons which bring about the bonds between atoms (in the Ge atom, the four electrons in the outer or *N* shell) are attached to their respective atoms. This means that there are no free electrons present in the crystal, or in other words, that the material is a perfect insulator. Thus germanium too is a perfect insulator at —273 °C. If the germanium crystal is now supplied with energy in the form of heat or light, the atoms will start to vibrate, and the bonds between them can be weakened.

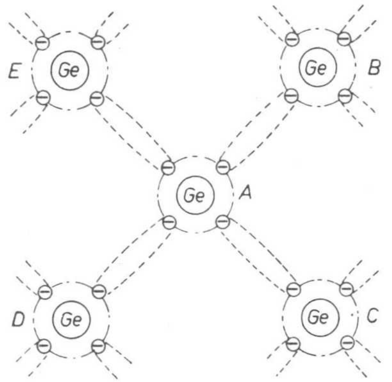

Fig. 11

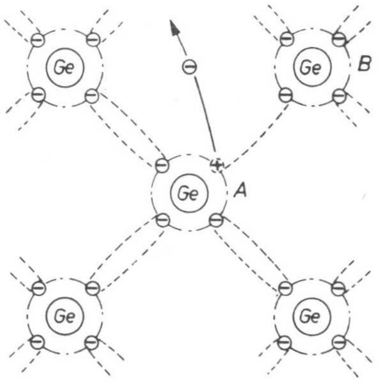

Fig. 12

Fig. 11 shows a Ge atom connected to 4 other Ge atoms, and is in fact Fig. 10 again, with the difference that the atoms are now represented in one plane, instead of in space. Each of the bonds between atom *A* and the four atoms round it is maintained by 2 valency electrons, one from atom *A*, and one from the other atom. If energy is now supplied to the crystal, a number of electrons (i.e. electrons from the outer shell, which maintain the mutual bonds between atoms) will break loose from the bond, and move about in the crystal as free electrons. The resulting situation is shown in Fig. 12. This means that the conductivity of germanium will increase when more electrons are released, as more energy, in the form of heat for example, is supplied to the crystal.

In Fig. 12, one electron has left the bond between atoms *A* and ***B***, with the result that this bond is maintained by only one valency electron. Suppose that the liberated electron belonged to the *N* shell of atom *A*. This means that an electron gap, usually termed a "hole", appears in the *N* shell. The Ge atom is no longer electrically neutral but has a positive charge equal to that of one electron. Consequently, the hole acts as if it was positively charged and attracts free electrons. If a free electron, moving about in the crystal, fills the hole again (recombination) the atom becomes neutral once more, and returns to its original condition. Since the number of electrons being liberated in a given period of time equals the number of recombinations which takes place, a thermal equilibrium is established. This means that for any given temperature, the number of free electrons is constant; if the temperature is increased, the number of free electrons will also increase. As the conductivity of the material depends on the number of free electrons, it too will also depend on the temperature. If the temperature of very pure germanium is raised, its conductivity will increase, or, in other words, the resistivity will decrease in agreement with the experimental results mentioned earlier.

The holes behave in the same way as electrons, that is, as free mobile particles, but with the difference that a hole represents a positive charge, and the electrons move through the crystal more quickly than holes. This can be understood when we realize that an electron is a completely independent particle, while a hole can only move when it is filled by an electron from a neighbouring atom. In this way, the hole moves to the neighbouring atom, and depends for its movement on the "willingness" of an electron in a neighbouring atom to break its bond with this atom. At room temperature the resistance of pure germanium is high, but it can be considerably reduced by alloying the germanium with certain substances.

N germanium and *P* germanium

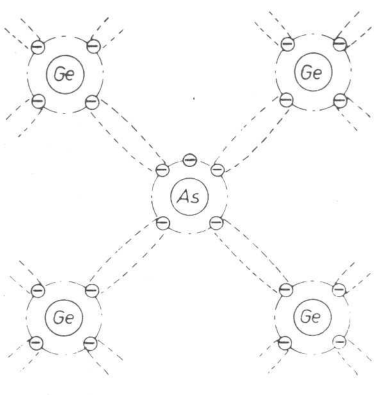

Fig. 13

Arsenic is an element whose atoms have 5 electrons in the outer shell. The situation which results when germanium is alloyed with an element like arsenic, is shown in Fig. 13.

The arsenic atoms, which are very much in the minority in comparison with the germanium atoms (usually, there is 1 arsenic atom to every 100,000,000 germanium atoms), will thus be incorporated in the crystal structure of the germanium. 4 of the 5 electrons in the outer shell of the arsenic atom will link with an electron from the outer shell of adjacent germanium atom, but the fifth electron is left unattached.

It is found that only a little energy is required to remove this fifth electron from the shell of the arsenic atom, so that electrons are liberated even at low temperatures, resulting in a steep drop in the resistance of the germanium. If the temperature is raised, the resistance increases, due to the Brownian movement of the liberated electrons, and then drops steeply once more when a certain limit is exceeded. The amount of energy being supplied to the material is now so great that the electrons which constitute the bonds between the germanium atoms can leave their shells under certain conditions, so that the number of free electrons will again increase sharply. This explains the behaviour of certain types of semiconductors, which we have already noted (see Fig. 6).

Germanium which is alloyed with arsenic in this manner is known as *N* germanium. The letter *N* stands for "negative", because even at room temperature, this type of germanium already possesses a very large number of free electrons. The arsenic atoms, which have lost an electron and are usually termed "donors", thus have a positive charge which is equal in magnitude to that of the lost electron.

Fig. 14 is a schematic drawing of a piece of *N* germanium. In this material there are:

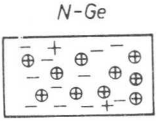

Fig. 14

1. Donors (arsenic atoms), which are positively charged. (⊕)

2. A large number of free electrons. (—)

3. A number of holes, very small in relation to the number of free electrons. (+)

These holes have been produced by the liberation (due to the supply of energy in the form of heat, for example) of some of the electrons forming the mutual bonds between the germanium atoms.

We can represent this diagramatically:

N germanium
- alloying with arsenic gives rise to
  - donors (+ charge)
  - free electrons (—)
- supplying energy gives rise to
  - free electrons (—)
  - holes (+)

It should be noted that the donors are "anchored" in the crystal structure, and so cannot move, in contrast to the free electrons and holes, which can move about.

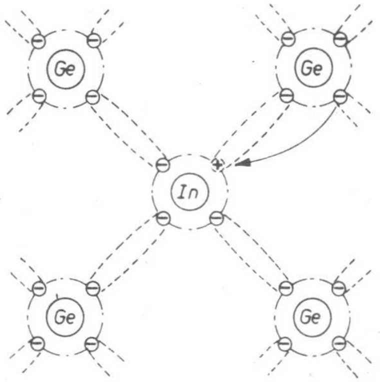

Fig. 15

Indium is an element whose atoms have 3 electrons in the outer shell. If germanium is alloyed with an element like indium, the resulting situation is as shown in Fig. 15. As the indium atoms are very much in the minority in relation to the germanium atoms, they will be taken up into the germanium crystal lattice. This means that an indium atom will be linked with three germanium atoms in the familiar manner, while the fourth germanium atom is only linked to the indium atom by one electron, as the latter atom only has 3 valency electrons. This link is one electron short, or, in other words, alloying the germanium has given rise to a hole. The hole becomes filled by a valency electron from a neighbouring germanium atom, and so moves about in the material. The indium atom, usually termed an "acceptor" now possesses 4 electrons in its outer shell, and will thus be negatively charged, since it is neutral when it has 3 electrons in the outer shell. Germanium which is alloyed with atoms having 3 electrons in their outer shell (e.g. indium or gallium) is termed *P* germanium.

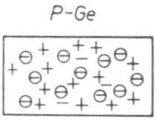

Fig. 16

The letter *P* stands for "positive" and indicates that large numbers of holes are present in this type of germanium.

Fig. 16 is a schematic drawing of a piece of *P* germanium. In this material there are:

1. Acceptors (indium atoms), which are negatively charged. (⊖)
2. A large number of holes. (+)
3. A number of free electrons, very small in relation to the number of holes. (—)

These free electrons are due to some germanium atoms losing one valency electron from their shell; the depleted links are maintained by only one electron.

We can represent *P* germanium diagramatically:

P germanium
- alloying with indium gives rise to
  - acceptors (— charge)
  - holes (+)
- supplying energy gives rise to
  - holes (+)
  - free electrons (—)

It should be noted that both *N* germanium and *P* germanium as a whole are electrically neutral, because the sum of the electrical charges on the various charge carriers, both mobile and static, equals zero.

The *PN* junction

A "*PN* junction" is formed when *N* germanium and *P* germanium are brought into contact with each other in such a way that the atoms in the *N* germanium combine, across the surface of contact, with the atoms in the *P* germanium, and vice versa.

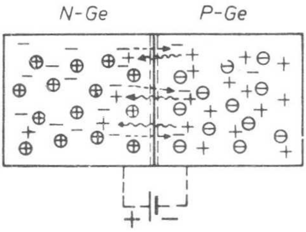

Fig. 17

Fig. 17 shows such a *PN* junction. The donors, free electrons and holes in the *N* germanium are represented by the symbols ⊕, — and +, respectively. The acceptors, holes and free electrons in the *P* germanium are represented by the symbols ⊖,. + and — At first sight, the situation looks quite simple. The holes from the *P* germanium will move towards the free electrons in the *N* germanium, and vice versa, after which most of the holes and free electrons in both types of germanium will recombine. A closer examination, however, shows that this reasoning is not valid, because it neglects the presence of the donors and acceptors, which are also charge carriers.

At the instant when a *PN* junction is formed, it is true that a number of electrons will move from the *N* germanium to the *P* germanium, where there is a shortage of electrons. As a result, a negative charge is built up in the *P* germanium, because it is not only the electrons, but also the acceptors anchored in the crystal structure, which are negatively charged. In exactly the same way, a positive charge is built up in the *N* germanium (the donors in the *N* germanium and holes coming from the *P* germanium).

This shift of charges causes a voltage difference (contact potential) at the *PN* junction, whereby the *P* germanium becomes negative with respect to the *N* germanium. The contact potential impedes any further flow of electrons and holes. For example, in the transition zone, the free electrons in the *N* germanium are repelled by the negative charge concentrated in the boundary zone of the *P* germanium. Consequently, only electrons and holes having greater energy, and thus greater velocity, can still break through the barrier, and so there is an extremely thin zone between the two types of germanium, in which no mobile charge-carriers are present. This zone thus behaves as an insulator, and is about 1 micron thick.

For the sake of convenience in the following discussion, we will represent the contact potential across the *PN* junction by a battery, shown dotted in Fig. 17 and subsequent figures, to indicate that it is only imaginary. We will now investigate what happens when a *PN* junction is connected to a voltage source. Fig. 18 shows a *PN* junction connected to a battery with the same polarity as the potential difference across the junction itself. The drop of potential across the *PN* junction now equals the sum of the battery voltage and the original contact potential. This means that still fewer electrons and holes are able to pass across the junction, and that the *PN* junction zone, in which there are no mobile charge carriers, will be wider than it was without the applied battery voltage. The *PN* junction can now be regarded as a diode in the blocked condition.

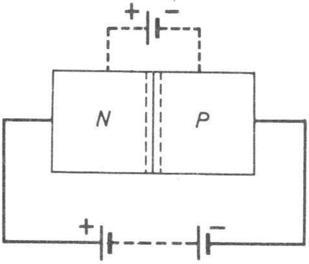

Fig. 18

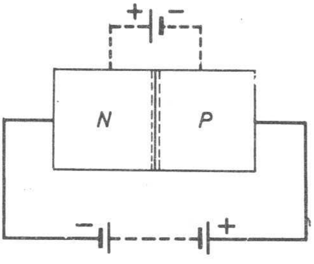

Fig. 19

The situation changes if the battery is connected the other way round. In this case, the battery voltage will oppose the potential difference across the *PN* junction, which means that more electrons and holes can pass through the junction, and their numbers rise as the applied voltage is increased (see Fig. 19). The zone in which there are no mobile charge-carriers is much narrower than 1 micron, and its width also depends on the applied voltage. In this situation, the *PN* junction can be regarded as a diode in the conducting state. We thus see that a *PN* junction behaves like a diode, and that the polarity of the applied voltage decides whether the junction blocks or conducts the flow of current. This characteristic is used in germanium diodes, amongst other applications.

How a transistor works

We saw in the first chapter that a transistor consists of three layers of

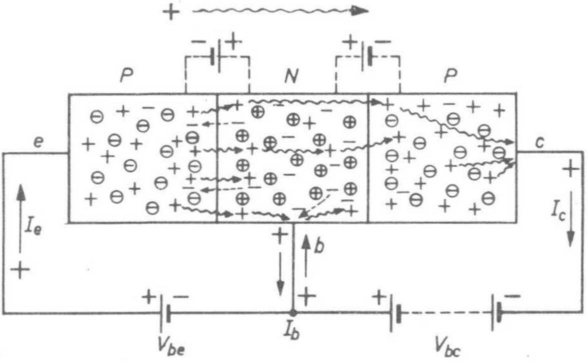

Fig. 20

germanium placed together like a sandwich. Depending on the order in which the layers are placed, we have either a *PNP* transistor or an *NPN* transistor. Fig. 20 shows a *PNP* transistor, formed by two layers of *P* germanium which are separated by a layer of *N* germanium, giving two *PN* junctions. The left-hand junction is connected to a battery whose voltage V_{be} is of opposite polarity to the contact potential at the junction.

As a result, a greater number of mobile charge-carriers can pass this junction. A number of holes from the *P* germanium will move into the *N* germanium, where there is a shortage of holes, and a number of free electrons from the *N* germanium will move into the left-hand *P* germanium layer.

The right-hand *PN* junction is also connected to a battery, but this time the battery voltage V_{bc} reinforces the contact potential across the junction. For all practical purposes, the holes in the *P* germanium (right-hand layer of *P* germanium) and the free electrons in the *N* germanium can no longer cross this junction. Things are different, however, for the holes in the *N* germanium and the free electrons in the *P* germanium, which are termed "minority carriers". This name is due to the fact that the holes in *N* germanium are very much in the minority in relation to the number of free electrons, and that the free electrons in *P* germanium are very much in the minority in relation to the number of holes in this type of germanium.

The holes in the *N* germanium, most of which have come from the left-hand *P* germanium, and only a small number of which have been produced by the supply of energy in the form of heat (at least at temperatures which are not too high), experience a force of attraction coming from the right-hand *P* germanium. At the right-hand *PN* junction there is a potential difference equal to the sum of the contact potential (which is due to the charges built up in the *P* germanium and the *N* germanium) and the applied battery voltage V_{bc}, making the *P* germanium negative with respect to the *N* germanium. As a result of this force of attraction, a number of holes will move into the right-hand germanium layer. The size of this hole current is determined by two factors:

a. The number of holes present in the *N* germanium.

b. The size of the applied battery voltage V_{bc}. It is assumed here that the temperature remains constant.

For the same reasons as described above, the free electrons in the right-hand *P* germanium will move towards the *N* germanium.

A hole current I_e (emitter current) flows in the left-hand current circuit ($+V_{be}$, *e*, *P* germanium, *PN* junction, *N* germanium, *b*, $-V_{be}$) as indicated in Fig. 20. The *PN* junction in this circuit functions as a diode in the conducting state. It is as if the battery was pumping holes into the germanium at point *e*, and so this point is called the "emitter".

Some of the holes now flow back to the battery via point *b* (the "base"), some will recombine with free electrons in the *N* germanium,

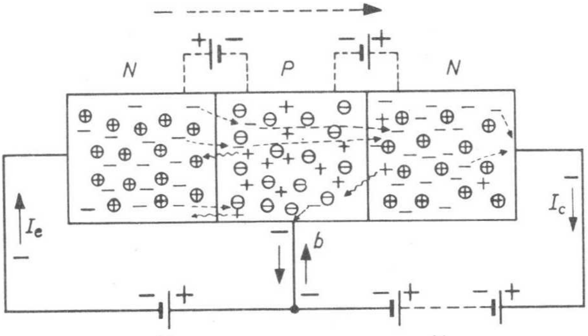

Fig. 21

but the majority will flow into the right-hand *P* germanium layer, under the influence of the force of attraction which this layer exercises on them. These holes are collected at point *c* (the "collector") and conveyed to the battery in the right-hand current circuit ($+V_{bc}$, *b*, *N* germanium, *PN* junction, *P* germanium, *c*, $-V_{bc}$). It follows that the current I_c is smaller than the current I_e. For the OC71, for example, $I_c = 0.98\ I_e$.

If the battery voltage V_{bc} remains constant, a change in the size of the hole current I_e results in a proportionate change in I_c, because I_c depends on the number of holes fed to the *N* germanium, and the latter in turn depends on the size of I_e.

Fig. 21 shows an *NPN* transistor.

After the above explanation, the method of operation of this transistor will at once be clear. It need only be noted that it operates by means of an electron current, in contrast to the *PNP* transistor, which operates by means of a hole current. This means that the polarity of the batteries which supply the voltages V_{bc} and V_{be} must be reversed.

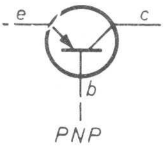

Fig. 22

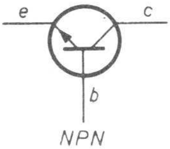

Fig. 23

Figs. 22 and 23 are the symbols for a *PNP* transistor and an *NPN* transistor respectively. With the exception of the arrow at the emitter, the two symbols are identical; this is quite logical, as the methods of operation, and thus the characteristics, of the two types of transistor are identical. The direction of the arrow in the symbol indicates the direction of the hole current. In the *PNP* transistor, this hole current flows into the transistor (see Fig. 20) so that the arrow in the symbol for the *PNP* transistor points towards the base. In the *NPN* transistor, the hole current flows in the opposite direction, so that the arrow points away from the base.

The symbol thus indicates straightaway if the transistor in question is of *PNP* or *NPN* construction.

CHAPTER III

TRANSISTOR CHARACTERISTICS

In this chapter we shall take a close look at the electrical characteristics of the transistor, so as to be able to understand the circuit techniques which are discussed later on.

The three basic circuits

From the point of view of circuitry the transistor is very similar to the triode valve, as both have three electrodes. The emitter, the base and the collector of the transistor correspond respectively to the cathode, the grid and the anode of the triode. As we have seen in the previous chapter, a *PNP* transistor has a hole current flowing from emitter to collector, while in the triode, a corresponding electron current flows from cathode to anode.

In the transistor, the size of this hole current depends on the variation of the voltage between emitter and base, while in the triode the electron current is controlled by voltage variations between grid and cathode.

As with valve circuits, transistor circuits can be divided into three basic classes. These are the grounded-base circuit, the grounded-emitter circuit, and the grounded-collector circuit. These circuits are often referred to as the common-base circuit, the common-emitter circuit and the common-collector circuit

Fig. 24 shows a triode in the grounded-grid circuit, with the corresponding transistor circuit, the grounded-base circuit, beside it. In both circuits, the central electrode, i.e. the grid or the base, is earthed. In the valve circuit, the job of the battery between cathode and grid, is to give the grid a definite negative bias (V_g) relative to the cathode, while the battery between grid and anode ensures the correct voltage difference between cathode and anode (V_a-V_g).

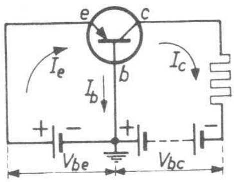

Fig. 24a

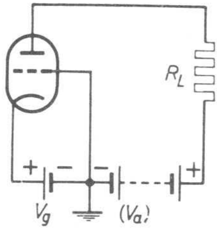

Fig. 24b

The purpose of both batteries is thus to fix the correct operating conditions for the valve.

In the transistor circuit, the correct operating conditions are obtained in exactly the same way, by means of batteries between base and emitter and base and collector.

Fig. 24a shows that the emitter has a positive bias of V_{be} volts with respect to the base, while the collector is V_{bc} volts negative relative to the base.

The current I_e flows in the input or emitter circuit, and the current I_c flows in the output or collector circuit. The arrows indicate the direction of the current (the hole current) in the two circuits. It is found that a small increase in the emitter current, represented by ΔI_e, produces a small increase in the collector current (ΔI_c). This assumes that the voltage V_{bc} remains constant. The quotient of ΔI_c and ΔI_e is termed the current amplification factor α.

$$\alpha = \frac{\Delta I_c}{\Delta I_e} \quad (V_{bc} = \text{constant}).$$

The value of this current amplification factor is generally less than 1, so that the collector current is smaller than the emitter current. The current amplification factor of the OC71 is 0.98.

In Fig. 25, the first electrode in both circuits is earthed, i.e. the emitter and the cathode respectively. The valve circuit is referred to as the grounded-cathode circuit, while the equivalent transistor circuit is known as the grounded-emitter circuit. Once again, the direct voltages V_{be} and V_{ce} supplied by the batteries, serve to fix the correct operating conditions for the transistor.

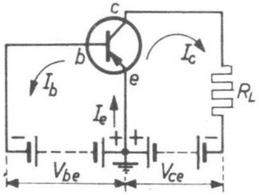

Fig. 25a

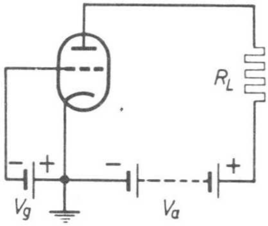

Fig. 25b

The base current I_b flows in the input or base circuit, and the collector current I_c flows in the output or collector circuit. The arrows in Fig. 25a indicate the direction of the hole currents. In this circuit, a small increase in the base current (represented by ΔI_b) results in an increase in the collector current (ΔI_c). The current amplification factor α' for the grounded-emitter circuit is defined as the quotient of ΔI_c and ΔI_b.

$$\alpha' = \frac{\Delta I_c}{\Delta I_b} \; (V_{ce} = \text{constant}).$$

The dash on the α indicates that it is the current amplification factor for a transistor in the grounded-emitter circuit.

There is a definite relationship between the amplification factor α (grounded-base circuit) and the amplification factor α' (grounded-emitter circuit). This is

$$\alpha' = \frac{\alpha}{1-\alpha}$$

This expression may be deduced by applying Kirchhoff's first law to the current circuit of Fig. 25a, when we obtain:

$$I_e = I_b + I_c.$$

Now:

$$\alpha' = \frac{\Delta I_c}{\Delta I_b} = \frac{\Delta I_c}{\Delta(I_e - I_c)} = \frac{\Delta I_c}{\Delta I_e - \Delta I_c}$$

$$\frac{1}{\alpha'} = \frac{\Delta I_e - \Delta I_c}{\Delta I_c} = \frac{\Delta I_e}{\Delta I_c} - 1 = \frac{1}{\alpha} - 1.$$

$$\frac{1}{\alpha'} = \frac{1-\alpha}{\alpha}$$

$$\alpha' = \frac{\alpha}{1-\alpha}$$

For the OC71, the published value of α for particular operating conditions is 0.98, but if this transistor is connected with a common emitter, the amplification factor is:

$$\alpha' = \frac{\alpha}{1-\alpha} = \frac{0.98}{1-0.98} = 49.$$

Finally, Fig. 26 shows the third basic circuit, in which the third electrode, that is, the collector or the anode respectively, is earthed. The basic valve circuit is known as the grounded-anode circuit (cathode follower), and the equivalent transistor circuit is known as the grounded-collector circuit. This circuit is seldom encountered, and practically its only application is as a matching element.

In the following discussion, only the grounded-base circuit and the grounded-emitter circuit will be examined in further detail. We shall pay particular attention to the grounded-emitter circuit, as it is the most frequently used arrangement. The reason for this will become clear in the course of this chapter.

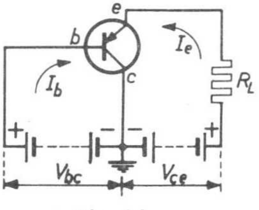

Fig. 26a

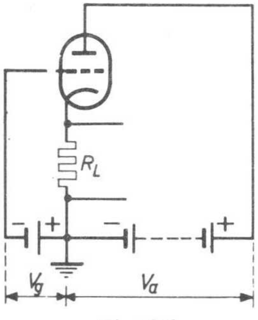

Fig. 26b

The I_c-V_{ce} characteristic

In order to become more familiar with the characteristics of any circuit element, and thus of a transistor too, we must make a number of measurements on that element.

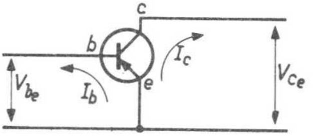

Fig. 27

As Fig. 27 indicates, a transistor circuit involves four important quantities which can be measured by simple methods, i.e. the voltage between emitter and base (V_{be}), the voltage between emitter and collector (V_{ce}) and the currents I_b and I_c which flow in the base circuit and collector circuit respectively. (The transistor is connected with grounded emitter.)

The various characteristics of the transistor can be derived from mutual relationships between these currents and voltages, which can be partially recorded in the form of characteristic curves.

The two most important are the I_c-V_{ce} characteristic and the I_b-V_{be} characteristic.

First of all, let us examine the behaviour of the collector current I_c as a function of the voltage V_{ce} and the base current I_b. This relationship, which can be recorded in the form of a family of curves, is the I_c-V_{ce} characteristic.

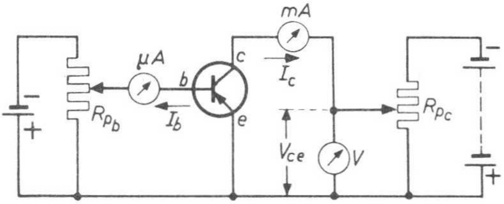

Fig. 28

Fig. 28 shows a circuit for measuring this characteristic. The current I_b is set to a given value, say 10 μA, by means of the potentiometer R_{pb}. (Of course, the choice of this value depends on the type of transistor being investigated). The slide of potentiometer R_{pc} is now moved upwards in stages, and the values of the voltage V_{ce} are read, together with the corresponding values of I_c. When this has been done, I_b is adjusted to another value, say 20 μA, and I_c is once more measured as a function of V_{ce}, and so on.

The experimental results are plotted in Fig. 29 in the form of a family of curves. These characteristics, which are very similar to the I_a-V_a curves of a pentode, can be divided into three important sections, these being successively:

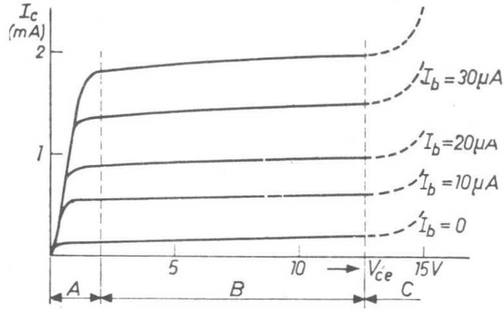

Fig. 29

A) The curved region at the left-hand end. This is the range within which a small increase in the voltage V_{ce} produces a considerable increase in the current I_c. For many transistors, this is the region in which V_{ce} is less than 0.2 volts.

B) The range within which an increase in the voltage V_{ce} hardly produces any change in I_c. This region is usually known as the linear range.

C) The curved region at the right-hand end. In this range, an increase in V_{ce} again results in a sharp rise in I_c, this being due to breakdown of the *PN* junction. So that a transistor should not be operated in this region, the manufacturer always indicates the maximum permissible value of V_{ce}. For the OC16, the maximum permissible value of V_{ce} is 16 V for a load resistance of 10 kΩ, while the knee voltage is 0.4 V at I_c = 3 A.

The I_b-V_{be} characteristic

The I_b-V_{be} characteristic, also termed the input characteristic, records the connection between the current I_b and the voltage V_{be} for a constant value of V_{ce}. It can be measured with the aid of the circuit shown in fig. 30.

The value of V_{ce} is set by means of the potentiometer R_{pc}. If the slide of potentiometer R_{pb} is opposite the tapping on the

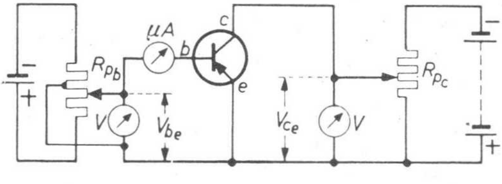

Fig. 30

resistance, the voltage $V_{be} = 0$ volts. If the slide is moved downwards, the base becomes positive relative to the emitter. This means that the input circuit will behave like a diode in the blocked condition, and thus an increase of the voltage V_{be} will make practically no difference to I_b.

On the other hand, if the slide is moved upwards, the emitter becomes positive in relation to the base. This means that with even a small increase of V_{be}, the current I_b will increase considerably.

The input characteristic of a transistor is shown in Fig. 31. It will at once be seen from the curve, which shows considerable agreement with the characteristic of a germanium diode, that the influence of V_{ce} is extremely slight. It is only the voltage increase from 0 to 1 V which has any effect on the size of I_b.

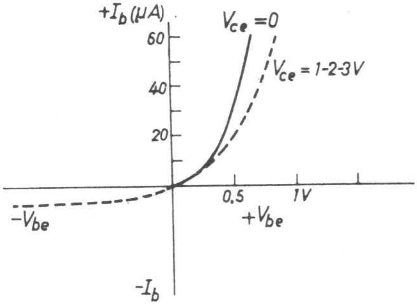

Fig. 31

Current amplification

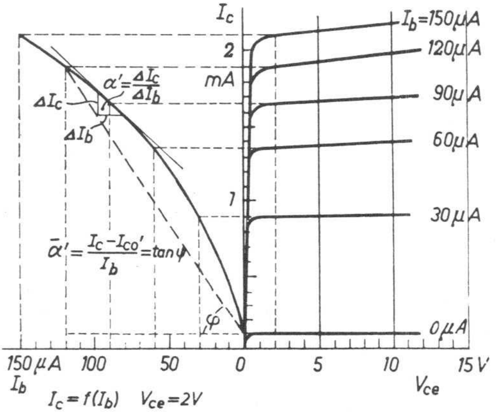

Fig. 32

Various magnitudes which determine the behaviour of the transistor in a circuit can be deduced from the I_c-V_{ce} and I_b-V_{be} characteristics. The first one is the current amplification, by which is meant the relationship between I_c and I_b at a constant value of V_{ce}.

For this purpose, Fig. 32 shows a family of I_c-V_{ce} characteristics. The relationship between I_b and I_c for $V_{ce} =$ 2 V is drawn to the left of these characteristics. It will at once be noted that this relationship is non-linear, or in other words, it depends on the operating conditions of the transistor.

The current amplification factor $\bar{\alpha}'$ is defined as the relationship between the direct current I_b and the direct current I_c, while the current amplification factor α', which has already been mentioned, indicates the relationship between an alternating current $I_{b\sim}$ of small amplitude, and the corresponding alternating current $I_{c\sim}$, also of small amplitude.

We will now examine $\bar{\alpha}'$, and then α', in more detail.

The connection between the direct collector current and the direct base current can be determined from the I_c-I_b characteristic of Fig. 32.

$$I_c = I_{co}' + \bar{\alpha}' I_b.$$

In this expression, I_{co}' represents the current flowing in the collector circuit when $I_b = 0$. Again the dash indicates that the transistor is connected with grounded emitter. The quantity $\bar{\alpha}'$ thus indicates the relationship $\frac{I_c}{I_b}$

As an example, let us determine the factor $\bar{\alpha}'$ for a transistor whose collector voltage in set at 2 V, with $I_b = 120\ \mu\text{A}$, $I_c = 1.9$ mA. The I_c-V_{ce} characteristic shows that for $V_{ce} = 2$ V, the current $I_{co}' = 100\ \mu\text{A}$.

Now:

$$I_c = I_{co}' + \bar{\alpha}' I_b$$

or

$$\bar{\alpha}' = \frac{I_c - I_{co}'}{I_b} = \frac{1900 - 100}{120} = 15.$$

As can be seen from the characteristic, the factor $\bar{\alpha}'$ is not constant, but depends on the transistor operating conditions.

For the factor α', the situation is different, as we are now working with an alternating current $I_{b\sim}$ of small amplitude. This means that only a small section of the characteristic plays a part in the current amplification, and it can be assumed as an approximation, that this small section is straight. There is thus a linear relationship between $I_{c\sim}$ and $I_{b\sim}$, that is

$$I_{c\sim} = \alpha' I_{b\sim}.$$

α' is also known as the small-signal current amplification factor, in contrast to $\bar{\alpha}'$, which only refers to direct current and to alternating currents of greater amplitude (as in an output stage, for example).

As an example, let us determine α' for a given set of operating conditions. The chosen working point is $V_{ce} = 2$ V, $I_c = 1.65$ mA, $I_b = 90$ µA.

A tangent is drawn to the $I_c = \mathrm{f}(I_b)$ characteristic at this point. Then α' is the ratio between the increase in I_b and the resulting increase in I_c, or in other words, equals the slope of the tangent to the curve. An increase of 20 µA in I_b produces an increase of 250 µA in I_c, so that $\alpha' = \dfrac{250}{20} = 12.5$. For the chosen operating conditions, $\bar{\alpha}'$ is thus greater than α'. The factor α (without a dash), is understood to indicate the current amplification factor for the transistor in the grounded-base configuration.

For most transistors, the value of α' varies between 30 and 80. For the OC71, for example, the average α' is 50.

Voltage amplification

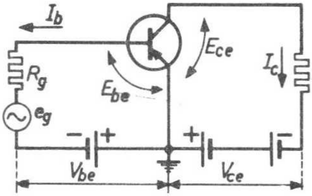

Fig. 33

Fig. 33 shows the circuit diagram of an amplifier incorporating a transistor connected with common emitter. The batteries which supply the voltages V_{be} and V_{ce}, required for setting the operating conditions of the transistor, are considered as short circuits for alternating current. The load resistor R_L forms part of the collector circuit, while a voltage source of e.m.f. e_g volts and internal resistance R_g Ω is connected across the input. The voltage amplification, abbreviated as $V.A.$ is defined as the ratio of the voltage across the resistance R_L, to the voltage between base and emitter (E_{be}).

The voltage across R_L equals $I_{c\sim} \times R_L$, while the voltage between base and emitter equals $I_{b\sim} \times R_i$ (R_i is the input resistance of the transistor) or $e_g - I_{b\sim}R_g$.

Consequently the voltage amplification is:

$$V.A. = \frac{I_{c\sim}R_L}{I_{b\sim}R_i} = \frac{I_{c\sim}R_L}{e_g - I_{b\sim}R_g}$$

As the ratio $\frac{I_{c\sim}}{I_{b\sim}} = \alpha'$ the expression can also be written as

$$V.A. = \alpha' \frac{R_L}{R_i}$$

In this expression, it is assumed that the alternating voltage is of low frequency. (Most measurements are made with a 1000 c/s signal.)

Fig. 33 also shows that when the instantaneous value of e_g increases in the positive sense, the current I_b becomes smaller, in proportion to the increase of e_g. This is because the voltage difference between base and emitter (E_{be}) equals (V_{be}- the instantaneous value of e_g) and this becomes smaller as the instantaneous value of e_g increases, so that I_b also becomes smaller. Consequently the current I_c, which equals $\alpha' I_b$, will also decrease, so that the voltage across R_L drops. This shows that in the grounded-emitter circuit, the voltage across the load resistance (i.e. the output voltage of the transistor) is shifted 180° in phase, relative to the input voltage of the transistor.

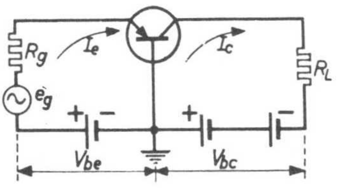

Fig. 34

In the grounded-base circuit (see Fig. 34), the situation is rather different. The voltage amplification is now:

$$V.A. = \frac{I_{c\sim}R_L}{I_{e\sim}R_i} = \alpha \frac{R_L}{R_i}$$

and the transistor output voltage is in phase with the input voltage, as is immediately obvious from Fig. 34.

If the two basic circuits are compared, we can say that the grounded-emitter circuit produces a phase difference of 180° between the input and output voltages, while in the grounded-base circuit the two voltages are in phase.

It follows from the expression for the voltage amplification, that this amplification depends very much on the size of the load resistance. Fig. 35 indicates the relationship between the voltage amplification and the load resistance, for an OC71 transistor under specified operating conditions. This characteristic shows that the voltage amplification alters only slightly in size at small values and at very high values of R_L. This is partly because the factors α' and R_i are also dependent on R_L; α' decreasing, for example, with increasing R_L. The characteristic illustrated in Fig. 35 is valid for both the grounded-emitter circuit and the grounded-base circuit, if it is assumed that the voltage source incorporated in the input circuit of the transistor has no internal resistance, or only a very small internal resistance.

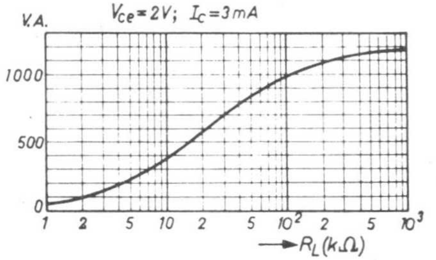

Fig. 35

Power amplification

The power amplification of a transistor indicates the relationship between the power taken up by the transistor, and the power it gives out. For the grounded-emitter circuit the output power is $I^2_{c\sim}R_L$ watts, while the input power is $I^2_{b\sim}R_i$ watts (see Fig. 33). The power amplification or gain (abbreviated as *P.G.*) is thus:

$$P.G. = \frac{I^2_{c\sim}R_L}{I^2_{b\sim}R_i} = (\alpha')^2\,\frac{R_L}{R_i}$$

from which it follows that $P.G. = V.A. \times \alpha'$.

For the grounded-base circuit the relationship is $P.G. = V.A. \times \alpha$. This expression can be established by the method used for the grounded-emitter circuit.

Fig. 36 shows the power gain plotted as a function of the load resistance for the OC71. The continuous line indicates the relationship

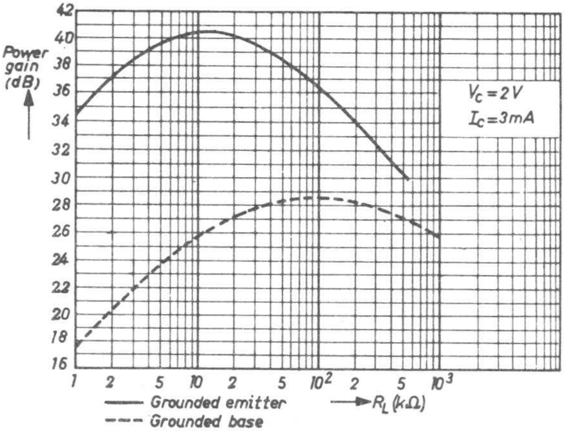

Fig. 36

for the grounded-emitter circuit, while the broken line indicates the relationship for the same transistor connected with grounded base.

These characteristics show at once that a much greater power gain can be achieved with the grounded-emitter circuit, with more convenient values of the load resistance (think, for example, of matching to a subsequent amplifying stage) than for the grounded-base circuit. This is one of the reasons why the first circuit is generally preferred to the second. The shape of the curve can be explained from the variation of the product $\alpha' \times V.A.$ At a low value of R_L, α' is large while $V.A.$ is small, and the reverse is true for a high value of R_L, when α' is small and $V.A.$ is large.

The input resistance

The input resistance of a transistor is defined as the quotient of V_{be} and I_b. We must immediately distinguish between the d.c. resistance, which is

$$R_i = \frac{V_{be}}{I_b}$$

and the a.c. resistance, which is

$$R_{i\sim} = \frac{V_{be\sim}}{I_{b\sim}}$$

In the latter case, a small section of the I_b-V_{be} characteristic is assumed to be linear (i.e. in exactly the same way as in the determination of α' from the characteristic).

In what follows, the term "input resistance" always refers to the a.c. resistance.

For the input circuit

$$e_g = I_{b\sim}\ (R_i + R_g)$$

or

$$R_{i\sim} = \frac{e_g}{I_{b\sim}} - R_g$$

It found that the input resistance depends to a great extent on the load resistance R_L.

Fig. 37 shows the input resistance as a function of the load resistance. The continuous curve again refers to a transistor connected with grounded-emitter, while the broken line refers to the same transistor in the grounded-base circuit.

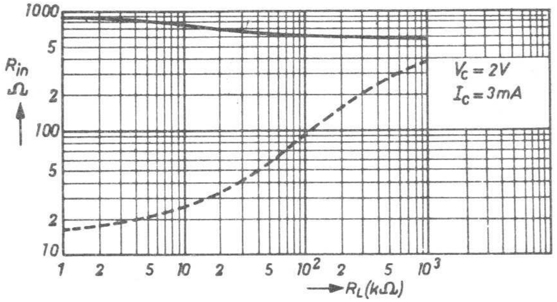

Fig. 37

It follows immediately from this graph that the input resistance is considerably greater for the grounded-emitter configuration than it is for the grounded-base configuration with the same value of R_L. The value of R_i in the grounded-base configuration is particularly small at relatively low values of R_L, so that matching to the next stage is very difficult, if not impossible.

The output resistance

The output resistance is defined as the quotient of current and voltage in the output circuit. Here too, we refer to alternating voltages and currents of small amplitude. For a transistor in the grounded-emitter configuration this means that $R_o = \frac{V_{ce\sim}}{I_{c\sim}}$, while for a transistor with grounded base, $R_o = \frac{V_{bc\sim}}{I_{c\sim}}$. Consequently, the output resistance at a given point of the I_c-V_{ce} characteristic (the I_c-V_{bc} characteristic for the grounded-base configuration) can again be determined by drawing the tangent to the curve, in exactly the same way as has already been described in detail in determining α' from the I_c-I_b characteristic.

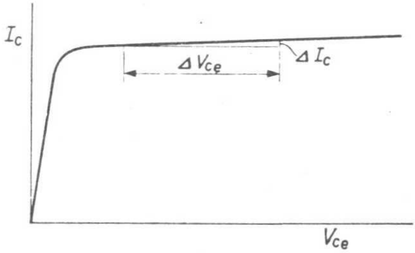

Fig. 38

The output resistance then equals the quotient $\frac{\Delta V_{ce}}{\Delta I_c}$ (see fig. 38).

It is found that the output resistance depends very much on the internal resistance of the voltage source which is connected to the input circuit of the transistor.

Fig. 39 shows R_o plotted as a function of R_g (the above-mentioned internal resistance).

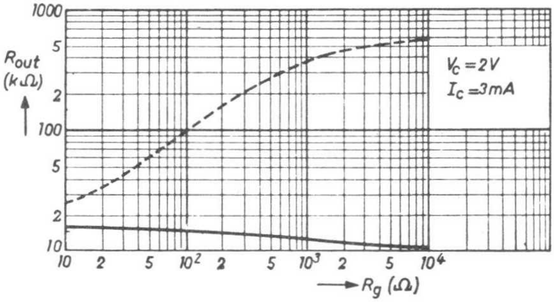

Fig. 39

The top curve refers to a transistor with grounded base, while the lower curve indicates the relationship for the grounded-emitter configuration. It can be seen from these curves that the output resistance is considerably greater for the grounded-base circuit than it is for the grounded-emitter circuit, so that the former will again require special precautions to obtain good matching to the following amplifier stage.

CHAPTER IV

THE INFLUENCE OF TEMPERATURE CHANGES ON THE BEHAVIOUR OF TRANSISTORS

We have already seen, in chapter II, that germanium is very sensitive to changes in temperature. An increase in temperature causes more outer-shell electrons to break the bonds holding them to the germanium atoms.

In *P*-germanium this means that, in addition to an increase in the number of holes (majority carriers in *P*-germanium) more free electrons (minority carriers in *P*-germanium) are produced, while the number of free electrons and holes in *N*-germanium will also increase. An increase in the number of minority carriers (holes in *N*-germanium and free electrons in *P*-germanium) however, means an increase in the current of mobile charge-carriers, which pass the right-hand *PN* junction (see chapter II, Fig. 20).

If the input circuit (the emitter circuit in the grounded-base arrangement) is broken, so that $I_e = 0$ (see Fig. 40), the current I_{co} flowing through the collector circuit consists of minority carriers, and consequently depends very much on the temperature. Measurements have shown that, on the average, this I_{co} doubles in value for a temperature increase of about 10 °C. For the OC71, the average value of I_{co} at 25 °C is 4.5 μA; at 35 °C it has increased to 9 μA and at 45 °C it equals about 18 μA.

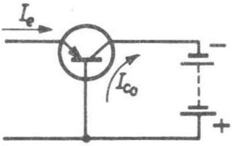

Fig. 40

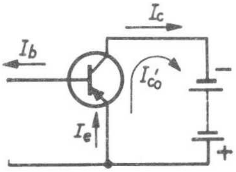

Fig. 41

(These currents are measured with a battery voltage V_{bc} of 4.5 V between base and collector.)

As the value of I_c is expressed in milliamperes ($I_c = \bar{\alpha} I_e + I_{co}$), these variations in I_{co} can be neglected, which means that a grounded-base circuit is generally insensitive to temperature changes and so does not usually require any special precautions to keep the collector current constant. We will now examine the situation which obtains when a transistor is connected with common emitter (see Fig. 41).

It follows from the circuit diagram that

$$I_e = I_b + I_c \quad \ldots\ldots\ldots\ldots \quad (1)$$

In addition, we already know that

$$I_c = \bar{\alpha}\, I_e + I_{co} \quad \ldots\ldots\ldots\ldots \quad (2)$$

As the above expression refers to direct current, it employs the current-amplification factor $\bar{\alpha}$ and *not* the factor α (see chapter III).

Substitution of (1) in (2) gives

$$I_c = \bar{\alpha}\,(I_b + I_c) + I_{co}$$

or

$$I_c = \bar{\alpha} I_b + \bar{\alpha} I_c + I_{co}$$

$$I_c - \bar{\alpha} I_c = \bar{\alpha} I_b + I_{co}$$

$$I_c\,(1 - \bar{\alpha}) = \bar{\alpha} I_b + I_{co}$$

$$I_c = \frac{\bar{\alpha}}{1 - \bar{\alpha}}\, I_b + \frac{1}{1 - \bar{\alpha}}\, I_{co} \quad \ldots\ldots\ldots \quad (3)$$

We already know from chapter III that $\frac{\bar{\alpha}}{1 - \bar{\alpha}}$ can be replaced by $\bar{\alpha}'$, so that equation (3) can also be written in the form

$$I_c = \bar{\alpha}' I_b + \frac{1}{1 - \bar{\alpha}}\, I_{co} \quad \ldots\ldots\ldots\ldots \quad (4)$$

The factor $\frac{1}{1 - \bar{\alpha}}$ can also be written as

$$\frac{1}{1 - \bar{\alpha}} = \frac{1 - \bar{\alpha} + \bar{\alpha}}{1 - \bar{\alpha}} = 1 + \frac{\bar{\alpha}}{1 - \bar{\alpha}} = (1 + \bar{\alpha}') \quad \ldots\ldots \quad (5)$$

Substituting (5) in (4), we have

$$I_c = \bar{\alpha}' I_b + (\bar{\alpha}' + 1)\, I_{co}.$$

The expression $(\bar{\alpha}' + 1)\, I_{co}$ is referred to as I_{co}'.

For the OC71, $\bar{\alpha}' = 49$ (for $V_{ce} = 4.5$ V).

At a temperature of 25 °C, I_{co}' is thus $(49 + 1) \times 4.5\ \mu\text{A} = 225\ \mu\text{A}$. At 35 °C this current is 450 μA and at 45 °C it equals 900 μA.

This means that I_{co}' now has a considerable influence on the magnitude of I_c, so that steps have to be taken to keep the latter constant (by using compensating circuits). A number of different circuits have been developed for this purpose, and we shall deal with some of them in the next chapter.

It should be noted that the quantities α and R_i are also temperature-dependent, although to a much smaller extent than I_{co}, so that any changes in these quantities, resulting from temperature variations, can generally be neglected.

The temperature of the *PN* junction in the germanium is determined by the difference between the heat developed in the germanium, and the heat which is removed. The former refers to the power which is converted into heat in the transistor, while the latter depends on the degree of cooling.

Suppose that the temperature of the germanium is Θ_j °C when a power of P_c mW is being converted into heat in the transistor and let the ambient temperature, i.e. the temperature outside the glass bulb (or metal cap), be Θ_{amb} °C.

This means that heat flows from the germanium to the outside of the bulb, at a rate depending on the difference of temperature between the two, i.e. on $(\Theta_j\text{-}\Theta_{\text{amb}})$ °C, and on the resistance which it meets on the way. This resistance, usually indicated by K; depends on the construction of the transistor, including its dimensions and the silicone grease which it contains, and thus constitutes one of the transistor characteristics which is given by the manufacturer.

Consequently, the thermal current which flows through the transistor is

$$\text{thermal current} = \frac{\Theta_j - \Theta_{\text{amb}}}{K} \quad . \quad . \quad . \quad . \quad . \quad . \qquad (6)$$

This thermal current is proportional to the power converted into heat in the transistor, so that equation (6) may be written as follows

$$P_c = \frac{\Theta_j - \Theta_{\text{amb}}}{K} \qquad (7)$$

In this expression, P_c is expressed in mW

Θ_j in °C,
Θ_{amb} in °C,
K in °C/mW.

Example: An OC44 has $K = 0.6$ °C/mW. The maximum permissible temperature of the germanium in this transistor is $\Theta_j = 75$ °C. What is the maximum permissible power $P_{c\max}$ which may be converted into heat in this transistor if the ambient temperature is $\Theta_{\text{amb}} = 25$ °C?

From equation (7)

$$P_{c\max} = \frac{75 - 25}{0.6} \approx 80 \text{ mW}.$$

If the transistor is mounted on the chassis, as is the case in output amplifiers, the thermal resistance K is composed of several components. For the OC16, for example, these are K_m between germanium and mount, K_i between mount and chassis, and K_h between chassis and surroundings, so that $K = K_m + K_i + K_h$. The respective published values for the OC16 are 1.8 °C/W, 0.7 °C/W and 3.75 °C/W. (It is obvious that the last value will depend to a great extent on the size and shape of the chassis, and also on the way in which the chassis is fitted in the cabinet.)

Example: An OC16 transistor has a collector dissipation of 4 W, and the ambient temperature is 50 °C. What is the temperature of the germanium?

Now $\Theta_j = \Theta_{\text{amb}} + (K_h + K_i + K_m)\, P_c$.
or
ambient temperature = 50 °C
chassis temperature $50 + 3.75 \times 4 =$ 65 °C
temperature of the mount $65 + 0.7 \times 4 =$ 67.8 °C
temperature of the germanium $67.8 + 1.8 \times 4 =$ 75 °C

CHAPTER V

CIRCUIT TECHNIQUES

Circuits which operate with transistors can be classified as follows, in the same way as circuits in which the amplifying element is a thermionic valve.

1) Amplifier circuits for audio-frequency signals.
2) Amplifier circuits for radio-frequency signals.
3) Oscillator circuits.
4) Mixer circuits.
5) Detector circuits.

We will now examine the various circuits more closely, in the above order.

I Amplifier circuits for audio-frequency signals

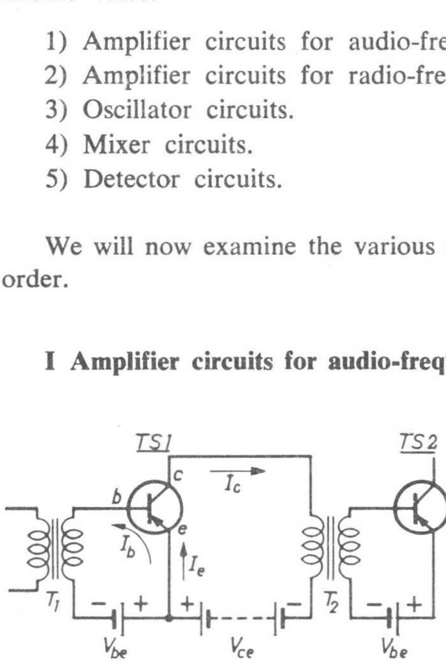

Fig. 42

Fig. 42 is the circuit diagram of an audio-frequency amplifier, in which the successive stages of amplification are coupled by means of transformers. The operating conditions of the transistor $TS1$ are determined by the two batteries which supply the voltages V_{be} for the input circuit, and V_{ce} for the output circuit. When there is no alternating voltage being fed to transformer T_1, the battery voltages will cause direct currents I_b and I_c to flow in the input and output circuits respectively, in the directions indicated by the arrows. If an alternating voltage is now fed to transformer T_1, the current flowing in the base circuit will equal the sum of the direct current I_b and the alternating current $I_{b\sim}$. This alternating current $I_{b\sim}$ is amplified α' times by the transistor (the value of α' depends on the operating conditions of the transistor, i.e. on V_{be} and V_{bc}) so that $I_{c\sim} = \alpha' I_{b\sim}$. We assume here that the batteries which supply the voltages V_{be} and V_{ce} have an extremely low internal resistance to the passage of alternating current. It follows from these considerations that a transistor is an energy amplifier, in contrast to the thermionic valve, which is a voltage amplifier. There is no current flowing in the input circuit (control grid circuit) of a thermionic valve (except in oscillation), as there is in a transistor input circuit.

To obtain the maximum transfer of energy from one amplifier stage to another, the two stages must be matched. In the circuit of Fig. 42, this is attained by a proper choice of the ratio between the primary and secondary windings of the transformer T_2. For example, if the output resistance of transistor *TS*1 is 100 kΩ and the input resistance of transistor *TS*2 is 1 kΩ, this ratio is

$$n = \sqrt{\frac{100{,}000}{1000}} = 10 : 1,$$

that is to say, that if good matching is to be obtained, the primary winding of transformer T_2 must have 10 times as many turns as the secondary winding.

Another possible method of coupling two amplifier stages is illustrated in Fig. 43. In this circuit, the two stages are coupled by an *RC* network, as is often done with thermionic valves. It will be obvious that this method does not give maximum transfer of energy, but on the other hand, a correctly-dimensioned *RC* network gives less distortion than the circuit already described. Think, for example, of the linear and non-linear distortion caused by the coupling transformer.

If the input circuit of *TS*1 incorporates a voltage source which generates an alternating voltage e_g, an alternating voltage also appears between the collector and emitter of *TS*1, but this voltage is 180° out of phase with the voltage e_g (see chapter III, page 30). The alternating voltage which is fed to *TS*2 is part of this collector-emitter voltage, and

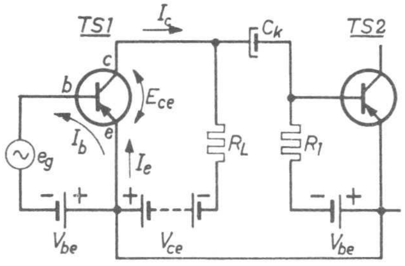

Fig. 43

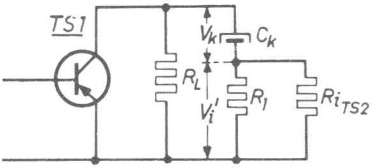

Fig. 44

is drawn from the potentiometer circuit formed by the coupling capacitor C_k and the parallel resistance R_1 and R_i (the latter is the input resistance of *TS*2), as illustrated in fig. 44. The values of the capacitances and resistances included in the input circuit of *TS*2 depend on two requirements. The first refers to distortion of the current in the input circuit and the other to the so-called cross-over frequency. With reference to the first requirement, it will be obvious that the values of the resistances and capacitances in the input circuit of *TS*2 must be chosen so that distortion of the current $I_{b\sim}$ in the input circuit is a minimum, because this distortion is amplified, together with $I_{b\sim}$, by a factor α'.

The term "cross-over frequency" refers to the frequency at which the voltage across the coupling capacitor becomes equal to the voltage across the parallel circuit of R_1 and R_i. In Fig. 44, this is the frequency at which $V_k = V_i'$, or

$$\frac{1}{\omega C_k} = R_i'.$$

(where R_i' is the equivalent resistance of the parallel circuit of R_1 and R_i), as the same current flows through C_k and the parallel circuit of R_1 and R_i.

Consequently, the cross-over frequency is equal to

$$f_k = \frac{1}{2\pi\, C_k . R_i'}$$

The choice of the cross-over frequency depends on the frequency characteristic required of the amplifier. To examine this question in more detail would take us too far from our subject, particularly as the problems involved are the same as those encountered in amplifiers equipped with thermionic valves.

Example: Suppose that the input resistance of the amplifier stage, R_i' equals 1000 Ω, and that the chosen cross-over frequency is $f_k = 50$ c/s. The value of the coupling capacitor, C_k, can be calculated from

$$f_k = \frac{1}{2\pi\, C_k\, R_i'}$$

or

$$50 = \frac{1}{2\pi\, C_k \times 1000}$$

$$C_k = 3.2 \times 10^{-6} \text{ F} = 3.2\ \mu\text{F}.$$

(A value which is very frequently met).

It should be noted that neither the circuit of Fig. 42 nor that of Fig. 43 are temperature stabilized, and so they can only be used if the temperature remains constant.

In the above discussion, it was assumed that the transistor was working under the optimum operating conditions, or, in other words, was giving the best possible amplification with the least distortion. We will now examine the factors which influence the choice of the operating conditions for a transistor.

The choice of the working point depends on a number of factors, the principal ones being:

1) The permissible thermal dissipation,
2) The available battery voltage,
3) The size of the load resistance,
4) The nature of the load (whether it is purely resistive, or is inductive),
5) The permissible distortion.

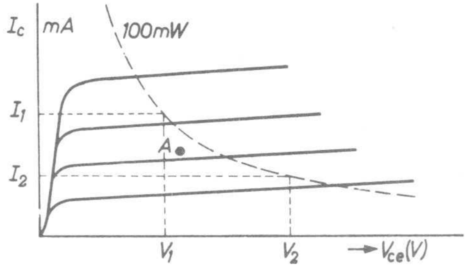

Fig. 45

Fig. 45 shows a family of I_c-V_{ce} characteristics for a transistor in the grounded-emitter configuration. The maximum permissible dissipation at the *PN* junctions is published by the transistor manufacturer. Suppose that it is 100 mW at 25 °C (ambient temperature) for the type of transistor selected. This means that $P_c = I_c \times V_{ce} = 100$ mW, and that in no circumstances must this value be exceeded at 25 °C. If this relationship, i.e. $I_c \times V_{ce} = P_c$, is plotted on a graph, we obtain a hyperbola, as represented by the broken line in Fig. 45. For each point on this curve, the value of $I_c \times V_{ce}$ is constant, so that

$$P_c = I_1V_1 = I_2V_2 \text{ etc.}$$

If the point *A* is chosen as the working point, it will be seen at once that the d.c. power which is converted into heat under these operating conditions is smaller than the maximum permissible value.

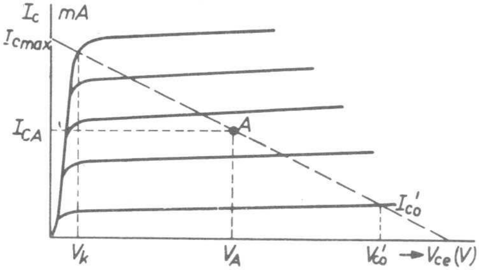

Fig. 46

The family of I_c-V_{ce} characteristics is plotted again in Fig. 46. Suppose that the battery voltage is V_{ce} volts. If the collector current $I_c = 0$, we have $E_{ce} = V_{ce}$ (see Fig. 43) while $I_{c\max} = \dfrac{V_{ce}}{R_L}$ when $E_{ce} = 0$. For every point on the load line, that is, the line connecting the two points V_{ce} and $\dfrac{V_{ce}}{R_L}$, the relationship

$$I_c = \frac{V_{ce} - E_{ce}}{R_L}$$

is valid. Consequently, the slope of this load line depends on the value of R_L.

The working point, which lies on the load line, depends on the value chosen for the direct voltage V_{ce}. A closer examination of Fig. 46 shows that the working-point must be at the centre of the voltage range between V_{co}'-V_k if minimum distortion is to be obtained. (For very small values of $I_{c\sim}$ and $I_{b\sim}$, this condition is not valid, and another position may be selected for the working point.)

The voltage ranges (0-V_k) and (V_{co}'-V_{ce}) cannot be used for amplifying an alternating current. In the first voltage range (below the knee voltage) there will be very considerable distortion because of the non-linear nature of the I_c/V_{ce} characteristics. The voltage range (V_{co}'-V_{ce}) cannot be used because, when $I_b = 0$ we have $I_c = I_{co}'$ and $V_{co}' = I_{co}' \times R_L$. The direct voltage to which the output circuit is adjusted is thus

$$V_A = \frac{V_k + V_{co}'}{2}$$

because, in this case, $(V_{co}' - V_A)$ is equal $(V_A - V_k)$. The working point A is thus that point on the load line at which the voltage equals V_A. The direct currents I_{ca} and I_{ba} (the quiescent currents corresponding to this working point) can be determined graphically from the family of I_c-V_{ce} characteristics and the I_c-I_b characteristic respectively, so that the operating conditions of the transistor are now completely determined.

Fig. 47 shows the mutual relationships between I_b, I_c, R_L and V_{ce} in the form of a numerical example for a type OC71 transistor, involving the use of a family of I_c-V_{ce} characteristics. After the above discussion, the example will be self-explanatory.

As it is preferable to use one battery instead of two, the circuit of Fig. 43 may be replaced by that of Fig. 48. The bias voltage on the base, which is essential to the operation of the transistor, is now obtained by means of the resistor R_b. The size of R_b is determined from

$$R_b = \frac{V_b - E_{be}}{I_b}$$

The direct current I_b is a constant which depends on the chosen operating conditions.

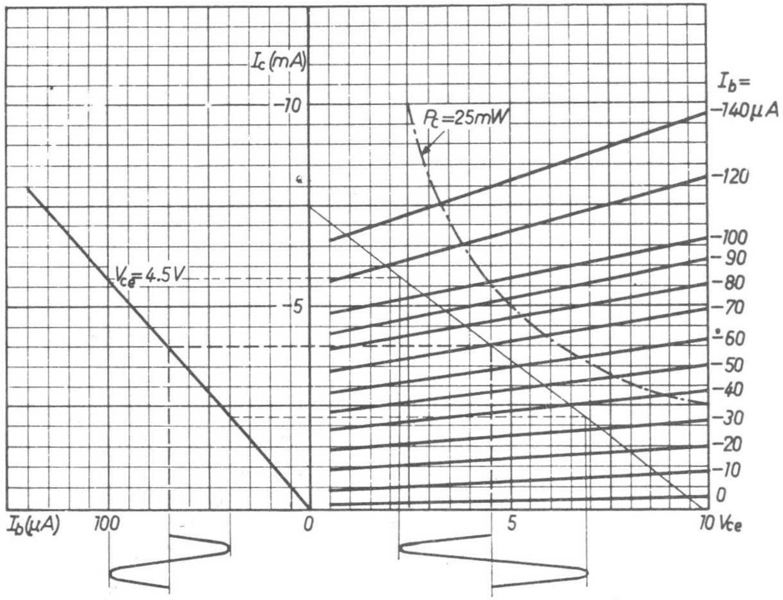

Fig. 47

As E_{be} is small in relation to V_b it may be neglected, giving the approximation

$$R_b = \frac{V_b}{I_b}$$

In practice, the value of R_b usually lies between 100 kΩ and 1 MΩ. It should be noted that the function of the coupling capacitor C_b is to block the direct current I_b. Otherwise, the input circuit might be short-circuited by the source of alternating current, in which case the operating conditions of the transistor would be changed.

It has already been explained that the operation of a transistor with grounded emitter is very dependent on variations in the temperature of the germanium. These temperature variations manifest themselves in a variation of the direct collector current ($I_c = \bar{\alpha}' I_b + I_{co}'$). Generally speaking, a transistor circuit can only be used if provision is made for compensating these variations of I_c, due to temperature changes. In the circuit of Fig. 48, this is achieved by connecting the resistor R_b between base and collector, so that the circuit is changed to that of Fig. 49.

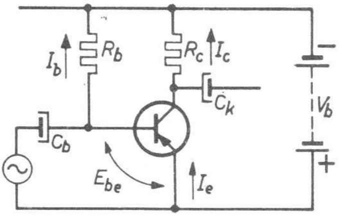

Fig. 48

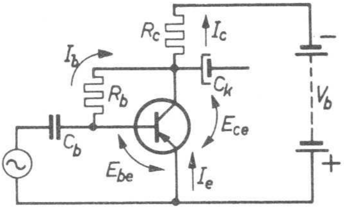

Fig. 49

The resistor R_b is now

$$R_b = \frac{E_{ce} - E_{be}}{I_b} \approx \frac{V_b - I_c R_c}{I_b}$$

In the second expression the terms $I_b R_c$ and E_{be} have been neglected, as I_b is very small in relation to I_c, while E_{be} is also very small in relation to E_{ce}.

In the expression

$$R_b \approx \frac{V_b - I_c R_c}{I_b}$$

R_b, R_c and V_b are constant, which means that when I_c increases, the term $(V_b - I_c R_c)$ decreases, so that I_b will also decrease, as the quotient of $(V_b - I_c R_c)$ and I_b remains constant.

The consequence of this reduction in I_b is that I_c will also decrease as is indicated by the expression

$$I_c = \bar{\alpha}' I_b + I_{co}'.$$

In this way, every variation in I_c, in the circuit of Fig. 49, is completely or partially compensated, whether it is due to temperature variations, or to an applied alternating voltage. This negative feedback means

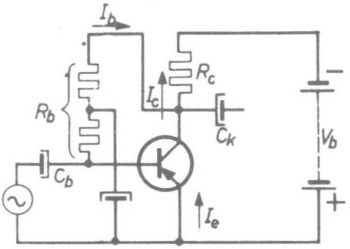

Fig. 50

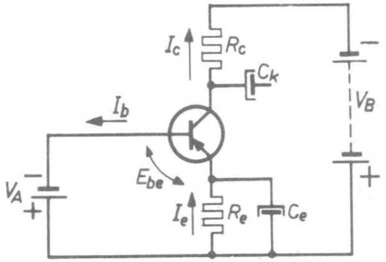

Fig. 51

that the total amplification of the stage will decrease, but the feedback itself can be reduced by splitting the resistor R_b into two resistances, each of the value $\frac{R_b}{2}$, and decoupling one of them (see Fig. 50).

The circuit of Fig. 51 offers another possibility of compensating for variations in the collector current. In it, a resistor R_e is connected in series with the emitter.

Consideration of the input or base circuit shows that

$$V_A = E_{be} + I_e R_e \quad \ldots\ldots\ldots\ldots \quad (1)$$

(Kirchhoff's second law).

The current I_e equals the sum of I_b and I_c, so that expression (1) becomes

$$V_A = E_{be} + (I_b + I_c)R_e \quad \ldots\ldots\ldots\ldots \quad (2)$$

As I_c is many times greater than I_b (at least $\bar{\alpha}'$ times as large), I_b can be neglected in expression (2) which then becomes

$$V_A = E_{be} + I_c R_e.$$

In this expression, V_A and R_e are constant, while E_{be} and I_c are variable.

If I_c increases, due to a rise in the temperature of the germanium, for example, the voltage across the resistor R_e will also increase ($I_c \times R_e$). This means that E_{be} will drop, because the battery voltage V_A does not change. In its turn, a drop in E_{be} results in a decrease in I_b

(see the I_b-V_{be} characteristic), so that I_c is once more reduced. In order to prevent variations in I_c, which result from the alternating current $I_{b\sim}$, from being completely or partially compensated, the resistance R_e is decoupled. In practice, the value of R_e usually varies from 10 Ω to 2 kΩ and that of C_e from 25 to 100 μF. As a number of disadvantages are attached to the use of a second battery, the circuit of Fig. 51 may be replaced by that of Fig. 52. The voltage V_A, which in Fig. 51 is supplied by a battery, is now obtained by means of a potentiometer circuit of resistors R_1 and R_2.

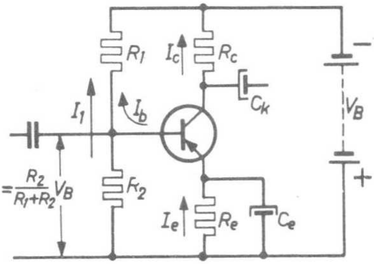

Fig. 52

If I_b is left out of consideration,

$$V_A = \frac{R_2}{R_1 + R_2} V_B.$$

To obtain good compensation, V_A must remain constant under all circumstances, or in other words, must be independent of variations in the current I_b which flows through the resistor R_1, in addition to I_1.

This means that the current I_1, which flows through resistors R_1 and R_2, must be large in relation to I_b. In practice, I_1 is usually 5 to 10 times as large as I_b. It must not be too large, as an excessive current consumption would affect the life of the battery adversely. Circuits which are operated from a large enough source, such as in car radios, are an exception to this rule.

As already stated, then, the above potentiometer circuit only gives good compensation when the current I_1 is large in relation to I_b, and the resistor R_e is not too small. If it is required to work with a low battery voltage, or with batteries of small capacity, which entail small values of R_e and I_1 respectively, the circuit will have to be modified somewhat if sufficiently effective compensation is to be obtained.

Any increase in I_c must be compensated by a decrease in I_b, that is, by a decrease in the voltage between base and emitter (V_A).
This voltage is:

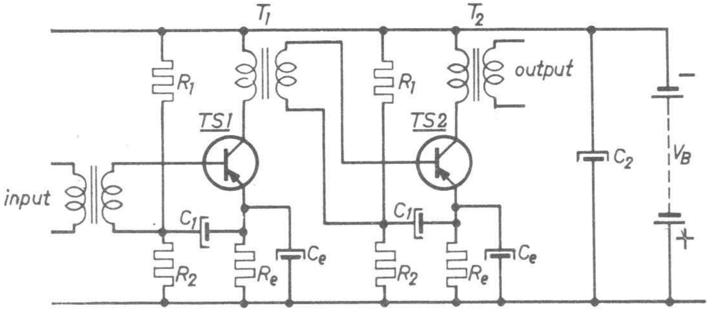

Fig. 53

$$V_A = V_B - (I_1 + I_b)\, R_1$$

Neglecting I_b we have:

$$V_A = V_B \frac{R_2}{R_1 + R_2} = V_B \frac{1}{\frac{R_1}{R_2} + 1}$$

V_A will decrease if the resistance of R_2 becomes smaller with increasing temperature. This means that R_2 must be a resistor with a negative temperature coefficient (NTC resistor or thermistor). We shall return to this point later, when discussing the push-pull circuit. Finally, two amplifier circuits with temperature compensation are drawn in Figs. 53 and 54. In the circuit of Fig. 53 the two amplifier stages are coupled by means of a transformer, and in Fig. 54 by means of an *RC* network. After the above explanations neither circuit should require any further comment.

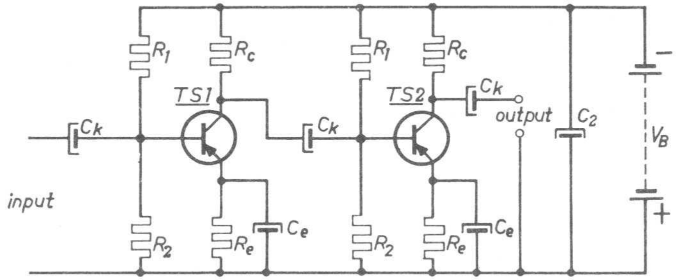

Fig. 54

Volume control

The choice of the position of the volume control in an a.f. amplifier usually depends on two factors; the noise and the amplification. If the volume control is included in the input circuit of the amplifier, as is often the case when connecting to a cristal pick-up, etc. the noise caused by the volume-control potentiometer is amplified together with the signal, so that the signal-to-noise ratio is adversely affected. On the other hand, if the volume control is not included in one of the first stages of the amplifier, it is possible that one of the stages preceding it may be overloaded without any remedy being possible (such as turning the volume control down). Consequently, the position of the volume control is usually a compromise between the requirements concerning the signal-to-noise ratio, and the desirability of being able to prevent over-loading of the preceding stages.

We have already seen that a transistor has a low input resistance and this at once poses a problem if the amplifier is to be connected to a microphone or a crystal pick-up. These circuit elements behave like a voltage source with a high internal resistance, which means that, in order to obtain good matching, the load must also be high. This is certainly true for the two signal sources in question, because the signal is small, and there is quite a possibility that it may be influenced by an interfering signal (e.g. hum) of approximately the same strength. (The magnetic field of a gramophone motor, for example.)

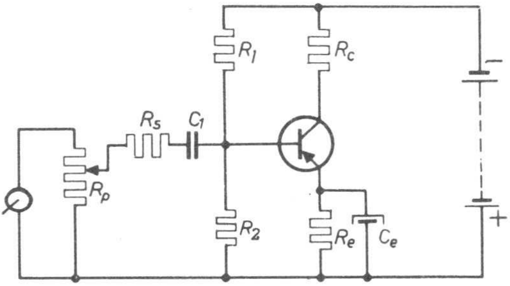

Fig. 55

One solution is shown in Fig. 55 where the pick-up is loaded by a high-resistance potentiometer, which also serves as the volume control. To prevent the low input resistance of the transistor being connected in parallel to the potentiometer resistance R_p when the slide is in the maximum position, thus resulting in loss of matching, an additional resistor R_s is connected in series with the input resistance. The coupling capacitor C_1 prevents the operating conditions of the transistor from being influenced by the movement of the potentiometer slide.

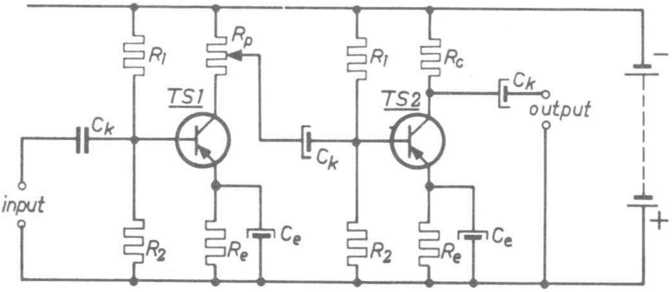

Fig. 56

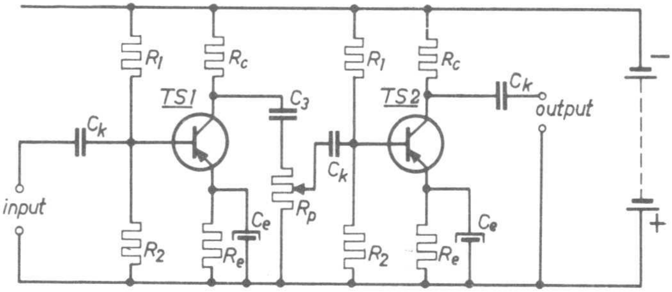

Fig. 57

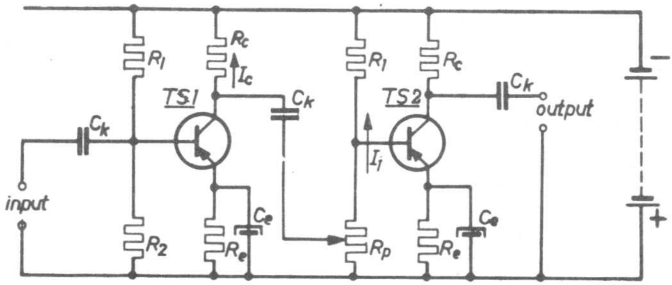

Fig. 58

If the potentiometer is not placed at the input of the amplifier, a number of different circuits are possible. The three commonest circuits are illustrated in Figs. 56, 57 and 58. The circuit of Fig. 56 has the disadvantage that the potentiometer R_p carries a direct current, which may give rise to increased noise. The circuit of Fig. 57, which is an improvement on Fig. 56, does not have this disadvantage, as the collector direct current is blocked by the capacitor C_3. In the circuit of Fig. 58 the volume control is included in the direct-current circuit which determines the working point of the transistor TS_2. This means that the potentiometer does carry direct current, but this circuit is to be preferred to that of Fig. 56, because I_c is many times greater than I_1.

The Output Stage

The job of the output stage is to supply energy to the loudspeaker, either directly or via a transformer. The most frequently used arrangements in transistor circuitry are:

1) The class A output circuit.
2) The push-pull circuit with transistors operating in class B or AB.
3) The single-ended push-pull circuit.

The class A output circuit

Fig. 59 is the circuit diagram of an output stage with the transistor connected for class A operation. At first sight, the circuit appears identical with that of a normal a.f. amplifier. (Compare Fig. 59 with Fig. 53.) This is quite logical, as we have already seen that the transistor is *not a voltage amplifier,* but an *energy amplifier*. The most important difference between a normal a.f. amplifier and an output amplifier is that the a.f. amplifier is driven by a signal of much smaller amplitude than the output amplifier. As a result, most of the distortion in a transistor amplifier is generally produced in the output stage, as is also true for amplifiers with thermionic valves. Consequently, a distinction is made in the literature, between small-signal amplifiers and large-signal amplifiers.

In these output stages in particular, it is of the utmost importance that the transistor should operate at maximum efficiency, partly on account of the permissible thermal dissipation, which is generally smaller than for thermionic valves. For this reason, the working point is chosen so that it lies on the dissipation hyperbola (see Fig. 45). The maximum permissible voltage between collector and emitter depends on two factors:

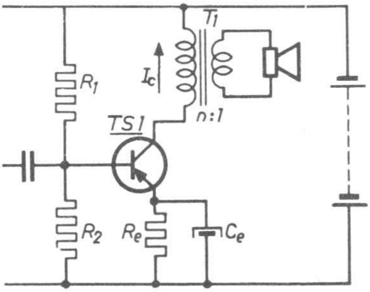

Fig. 59

a) The manufacturer's maximum collector-emitter voltage rating.

b) The nature of the load. If the collector circuit is purely resistive, the supply voltage can be made equal to the published voltage value, without any risk.

The situation changes, however, if an inductance is included in the collector circuit, as the voltage arising across the inductance when there is a sudden decrease in the current flowing through it ($E = -L \frac{di}{dt}$) must now be taken into account. In this case, the voltage across the transistor equals the sum of the supply voltage and the voltage across the inductance, which may be many times the size of the supply voltage. The size of I_c is also limited because, at higher values of this current, the current-amplification factor α' drops steeply (see the sharp bend in the characteristic), so that the correct load resistance is a compromise between the two limits which refer to voltage and current respectively.

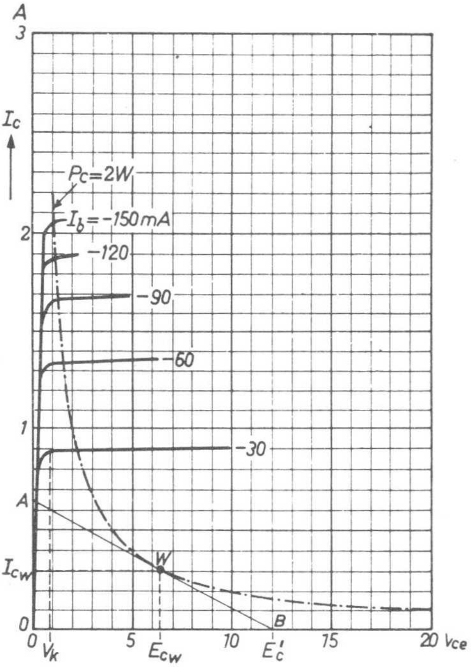

Fig. 60

Fig. 60 shows a family of I_c-V_{ce} characteristics, with the dissipation hyperbola also plotted. The voltage range available for amplifying purposes is thus $(E_c' - V_k)$, where V_k is the knee voltage.

This treatment neglects both the voltage loss across the emitter resistor $(R_e \times I_c)$ and the voltage drop caused by I_{co}'. The voltage E_{cw} is chosen so that $(E_c' - E_{cw}) = (E_{cw} - V_k)$.

The selection of the voltage E_{cw} determines the position of the working point W, and the load line AB can now be drawn (see Fig. 60). In this example, the collector load is

$$R_L = \frac{E_c' - E_{cw}}{I_{cw} - I_{co}'} \approx \frac{E_c' - E_{cw}}{I_{cw}}$$

and the voltage $E_c' = 12$ V.

$V_k \approx 1$ V, so that $E_{cw} = 6.5$ V and the corresponding $I_{cw} = 300$ mA.

Consequently

$$R_L = \frac{12 - 6{,}5}{300 \times 10^{-3}} \approx 18\ \Omega\ (I_{co}' \text{ is neglected here}).$$

The efficiency of the output stage is theoretically determined as follows:

The d.c. power taken up by the transistor is

$$P_i = E_{cw} \times I_{cw} \quad \ldots\ldots\ldots\ldots \quad (1)$$

The a.c. power given out by the transistor is

$$P_o = \tfrac{1}{2}\,(E_{cw} - V_k)\,(I_{cw} - I_{co}') \quad \ldots\ldots\ldots \quad (2)$$

Now $\eta = \dfrac{P_o}{P_i} \times 100\,\%$.

Substituting (1) and (2) in this expression, we have

$$\eta = \frac{\tfrac{1}{2}\,(E_{cw} - V_k)\,(I_{cw} - I_{co}')}{E_{cw} \times I_{cw}} \times 100\,\%.$$

In the ideal case, when there is no distortion, and thus the transistor is operating with linear characteristics, and when in addition, I_{co}' is very small in relation to I_{cw}, the maximum attainable efficiency is 50 %. In practice, of course, the efficiency will be lower. The value of the load resistance may be calculated from

$$R_L = \frac{E_{cw} - V_k}{I_{cw} - I_{co}'}$$

The push-pull circuit with two transistors in class B

The output stage which finds the most application in practice is the push-pull circuit with two transistors operating under class B or AB conditions. This configuration is used to obtain maximum efficiency, as the transistors are usually fed from batteries. Fig. 61 shows the circuit diagram of such a push-pull stage, which can at once be split into the actual push-pull circuit itself, and the d.c. circuit which provides the right operating conditions and temperature stabilization. We will examine the d.c. circuit first.

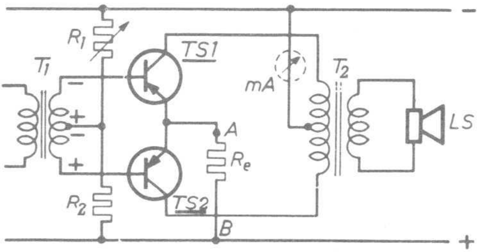

Fig. 61

For both transistors, the negative bias of the base relative to the emitter is obtained by means of the potentiometer circuit of resistors R_1 and R_2, and can be adjusted by means of R_1. The resistor R_e, which forms part of the emitter circuit of both transistors, provides the necessary temperature stabilization. On closer examination of the circuit, we notice that the resistor R_e is not decoupled. This is because a decoupling capacitor would become charged, and would cause considerable distortion.

Suppose that the instantaneous value of the alternating voltage induced in the secondary winding of the input transformer has a polarity as indicated in the diagram. The base of transistor *TS*1 is negative in relation to the emitter, so that the input circuit of this transistor carries a current. If the resistor R_e was bridged by a capacitor, the latter would become charged, and point *A* would become negative relative to point *B*. During the other half cycle of the alternating voltage, the input circuit of the top transistor (*TS*1) is blocked, while that of the bottom transistor (*TS*2) carries a current. Consequently, full-wave rectification takes place in the input circuit of the two transistors, and point *A* would become negatively charged in relation to point *B*. The resultant voltage difference between points *A* and *B* would affect the operating conditions of both transistors, so that a large amount of distortion would be introduced. For the same reasons, the resistor R_e is kept small (usually less than 20 Ω), or else is omitted altogether. In the latter case, shown in Fig. 62, the resistor R_2 is usually shunted by an NTC resistor or thermistor.

Having dealt with the d.c. circuit, which serves principally for the determination of the working point of the transistor, and for temperature stabilization, we will now consider the a.c. circuit, the principle of which is shown in Fig. 63. The input circuit of this push-pull stage consists of the secondary winding of the transformer T_1 and the base-emitter junctions (equivalent to diodes) of transistors *TS*1 and *TS*2. It will at once be

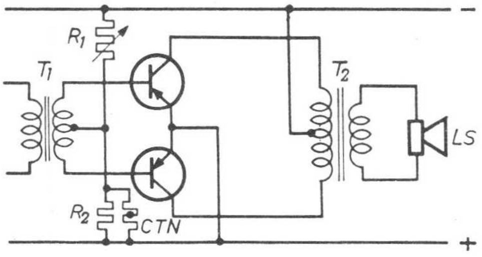

Fig. 62

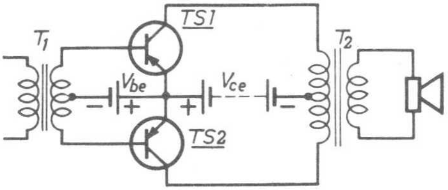

Fig. 63

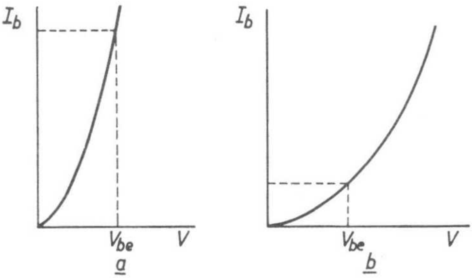

Fig. 64

seen from the input characteristics shown in Fig. 64, that a given bias V_{be} (supplied by the battery) may result in fairly large differences in I_b for the two transistors. A first requirement for good push-pull operation, however, is that the current in the collector circuit should be the same for both transistors. In order to achieve this, the input characteristic and the current amplification factor of the two transistors must be identical, within certain limits. For this reason, transistors for push-pull output stages are often supplied in "matched" pairs, i.e. the two transistors are selected in the factory, so as to have similar input characteristics and current-amplification factors. If one of the two

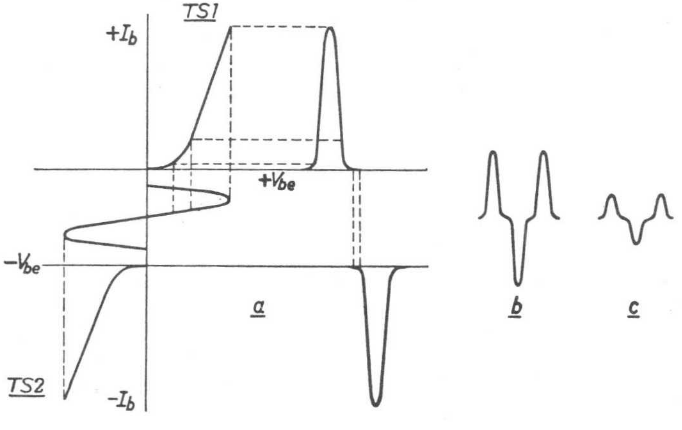

Fig. 65

output transistors becomes defective, the good one must also be removed, and the pair of them replaced. The working point of the two new transistors is then adjusted by means of the variable resistor R_1 (see Fig. 61). This adjustment will be discussed in more detail, later on.

Fig. 65*a* shows the input characteristics of the transistors *TS*1 and *TS*2, both operating in class B. The two characteristics, which are completely identical, are drawn in the manner normally employed for thermionic valves. If the amplitude of the alternating voltage induced in the secondary of the input transformer T_1 is A volts, a current I_b will flow in the input circuit of the transistors, as plotted once more in Fig. 65*b*. With a voltage of smaller amplitude, the current I_b flowing in the input circuit has the form shown in Fig. 65*c*. Consideration of Figs. 65*b* and 65*c* shows that the distortion increases as the current I_b becomes smaller, so that the current I_b shown in Fig. 65*c*, is already unacceptably deformed. This is the reason why two transistors are never operated purely in class B, but rather in class AB; in class AB, the percentage distortion decreases sharply, as may be seen from Fig. 66. The operating conditions cannot be changed in this way, however, without taking other considerations into account, because the current I_b increases considerably, and increases the chance of overloading. In practice, a compromise has to be made between the permissible distortion on one hand, and the maximum permissible value of I_b on the other, the latter in connection with the maximum permissible collector dissipation. Remember that the collector current, which has the same form as I_b, is α' times the size of the latter. Receiver manufacturers therefore indicate a maximum permissible value (mentioned in the servicing literature), which must not be exceeded. If the transistors are replaced, a milliammeter is included in the collector circuit, as shown in Fig. 61, and the working point of the new transistors is adjusted by

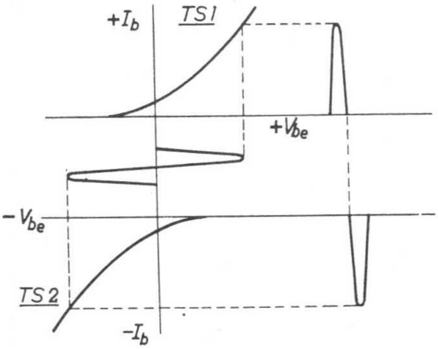

Fig. 66

means of the potentiometer R_1, until this value is reached, as indicated by the meter.

The efficiency of a class B push-pull circuit, with two transistors, may be calculated as follows. The a.c. power developed by each transistor is

$$P_o = \tfrac{1}{2} \frac{V_m}{\sqrt{2}} \times \cdot \frac{I_m}{\sqrt{2}} = \tfrac{1}{4} V_m I_m.$$

The $\frac{1}{2}$ is due to the fact that each transistor supplies only half of each cycle of alternating current, and is blocked during the other half-cycle, i.e. $TS1$ supplies one half of the cycle and $TS2$ supplies the other half. The d.c. power taken up by each transistor during one a.c. cycle is

$$P_i = \frac{1}{\pi} V_m \times I_m = \dot{V}_g \times I_g.$$

$$\text{So that } \eta = \frac{P_o}{P_i} = \frac{\frac{1}{4} V_m I_m}{\frac{1}{\pi} V_m I_m} = \frac{\pi}{4} = 0.78 \text{ or } 78\,\%.$$

Because of requirements connected with the permissible distortion, however, the efficiency attainable in practice is lower, usually being from 60 to 68 %.

The single-ended push-pull circuit

Where a higher supply voltage is available (public address systems, car radios, for example) the normal push-pull circuit is sometimes replaced by the single-ended push-pull circuit. This circuit can easily be derived from the classical push-pull circuit as follows.

The basic push-pull circuit is shown again in Fig. 67, but with the difference that the output transformer has been replaced by a resistor R_o. This is justified by the fact that the output transformer is loaded by a loudspeaker, which for all practical purposes, behaves like a resistive load. The same circuit is redrawn in Fig. 68, but with the resistor R_o split into two equal parts.

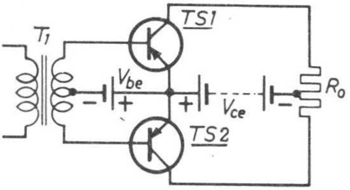

Fig. 67

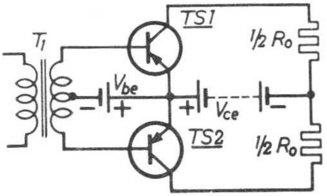

Fig. 68

The two circuits comprising the push-pull circuit are now shown separately in Fig. 69. Fig. 70 is the same as Fig. 69, except that the lower circuit has been turned upside down, and the resistors $\frac{1}{2} R_o$ have changed place with the batteries. The single-ended push-pull circuit is obtained by joining the collector circuits of transistors *TS*1 and *TS*2 together (dotted lines in Fig. 70) and is thus as shown in Fig. 71. It is at once obvious that in contrast to the classical push-pull circuit, the two transistors are now connected in series for direct current, but in parallel for alternating current. In the new circuit, the load resistance is reduced to one quarter of its value in the normal push-pull circuit, while the voltage between the collector of *TS*1 and the emitter of *TS*2 is twice the corresponding voltage in the latter. This last point is particularly important in circuits operating with relatively high power (2 × OC16 in push-pull, for example) where currents of 2 to 3 A are required, because of the low voltages. (Bear in mind the rectifier or batteries which have to supply these heavy currents.)

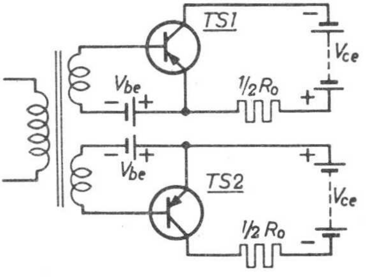

Fig. 69

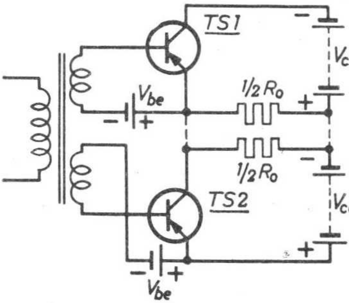

Fig. 70

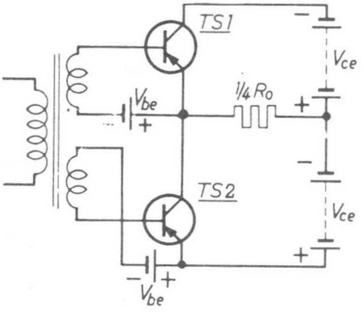

Fig. 71

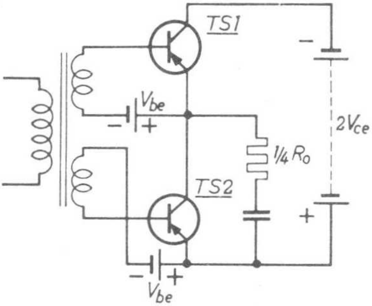

Fig. 72

Fig. 71 also indicates that no direct current is flowing through the load resistance, ($\frac{R_o}{4}$), but only alternating current. As it is rather inconvenient to use a battery with a centre-tap, Fig. 71 may be replaced by Fig. 72. As far as alternating current is concerned, the circuit has not changed at all, as the battery is practically a short circuit for alternating current. This is not so for direct current, however, as the resistor ($\frac{R_o}{4}$) is now connected in parallel with the transistor $TS2$, and a capacitor has to be included in series with the resistor, in order to block the direct current. Finally, Fig. 73 shows another practical example of this type of circuit, in which the working point of both transistors is adjusted by means of the resistors R_1 and R_2.

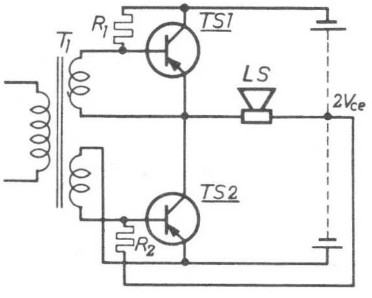

Fig. 73

Tone control

A transistor amplifier will require correction of its frequency characteristic at a lower frequency than a similar amplifier using thermionic valves. In a grounded-emitter transistor circuit, for example, it may no longer be possible to ignore the phase shift between collector current and base current at even such a relatively low frequency as 5000 c/s. (This phase shift is never exactly 180° but changes with changing frequency.) We shall consider these phase displacements in more detail when we discuss r.f. transistors. The resulting linear distortion also depends on the number of transistors connected in cascade.

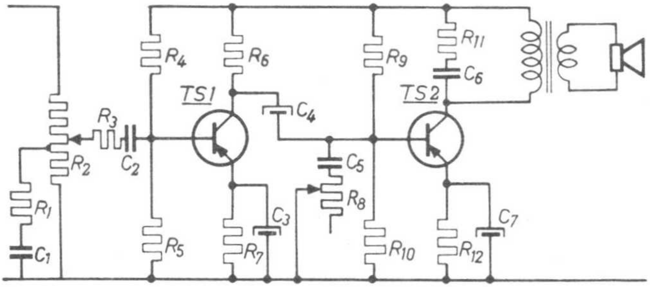

Fig. 74

Consequently, it may be necessary or desirable to have additional means of tone control for the higher frequencies. Fig. 74 shows some of the many possible ways of achieving this. First of all, there is a series circuit of resistor and capacitor, connected to a fixed tap on the volume control at the input of the amplifier. The resulting effect on the frequency depends on the position of the volume control and this is known as "physiological" volume control. The object of this circuit is to provide some compensation for the ear's insensitivity to high and low frequencies at low volume.

Another type of tone control (C_5 and R_8), which is independent of the volume control, is applied between base and emitter of the transistor *TS*2. In addition, the primary of the output transformer is often shunted by a series circuit of resistor and capacitor (R_{11} and C_6).

However, very effective adjustment of the frequency characteristic of the amplifier can be obtained by means of frequency-dependent negative feedback.

Negative feedback

The degree of distortion experienced by the amplified signal depends on the choice of the working point and on the amplitude of the input signal. The influence of this second factor is due to the more or less curved form of the various transistor characteristics. Most of the non-linear distortion in the output signal arises in the output stage, since this operates with large signal amplitudes. This means that in a transistor amplifier it is often sufficient to apply feedback across the output stage, and possibly the preceding driver stage as well.

The feedback voltage may be taken from either the primary or the secondary side of the loudspeaker transformer. In the second case, the distortion due to the transformer itself is also reduced but against this, the extra phase displacement caused by the transformer may make the circuit unstable. The feedback voltage derived from the output is conveyed, in the correct phase, to the input circuit of the transistor in the driver stage. The circuit is shown in Fig. 75. The capacitor C_1 functions as a blocking capacitor, with the object of preventing any disturbance of the operating conditions of the driver stage (*TS*1). A phase-shift network is often included in the feedback circuit, so as to prevent excessive phase shift of the feedback voltage at the higher frequencies, which could lead to instability. In Fig. 75 this is the parallel circuit of R_1 and C_2. As already mentioned in connection with tone control, the frequency charac-

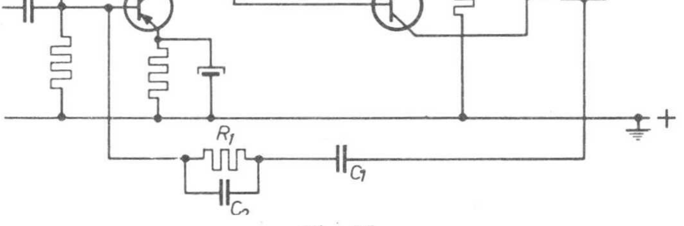

Fig. 75

teristic of the amplifier can often be influenced to a considerable extent by proper dimensioning of the negative-feedback circuit. For example, if the value of the blocking capacitor in Fig. 75 is kept low, there will be less feedback for the low frequencies than for the high frequencies.

Practically the only applications of negative feedback to the first stages of an amplifier are

a) to influence the frequency characteristic of the amplifier,
b) to reduce variations in α'.

The commonest arrangement in a resistance-coupled amplifier, is to take the feedback from the collector to the base, either directly or via a frequency-dependent network. An alternative to this voltage feedback is current feedback obtained by not decoupling the emitter resistor, or by only partial decoupling.

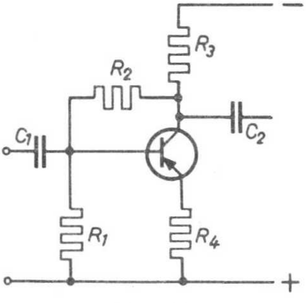

Fig. 76

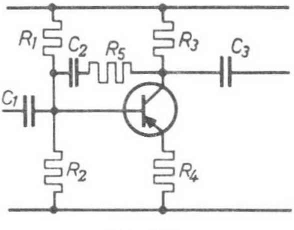

Fig. 77

Fig. 76 shows a simple circuit which is frequently employed to reduce the spread in amplification resulting from variations in α'. This circuit has the additional advantage that it increases the stability of the transistor operating conditions (d.c. stabilisation). Finally, Fig. 77 shows a frequency-dependent feedback circuit, by means of which an extra boost can be given to the low frequencies, to an extent depending on the choice of capacitor C_2.

II Amplifier circuits for radio-frequency signals

So far, we have only discussed circuits in which the transistor has operated as an amplifier for audio-frequency signals. It was tacitly assumed that the transistor was purely resistive in its behaviour or, in other words, that any capacitances and self-inductances could be neglected. This is indeed true for the circuits we have already considered, but it is not true for the circuits to be discussed now. Before we start examining the various r.f. circuits, however, we must take a closer look at the transistor itself.

Fig. 78 shows a transistor connected with common or grounded emitter. The input circuit consists of the voltage generator supplying an alternating voltage e_g, the resistance which the alternating current experiences in the *N* germanium, and the resistance of the *PN* junction between base and emitter. This *PN* junction, however, also behaves as a capacitor, because it consists of two types of germanium, separated by an insulator (see chapter II). Consequently, the input circuit can be represented by the equivalent circuit of Fig. 79.

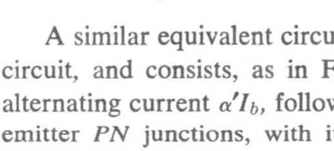

Fig. 78

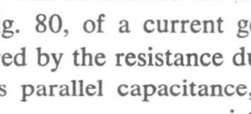

Fig. 79

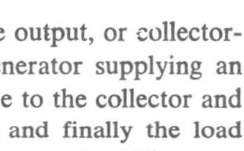

Fig. 80

A similar equivalent circuit can be derived for the output, or collector-circuit, and consists, as in Fig. 80, of a current generator supplying an alternating current $\alpha' I_b$, followed by the resistance due to the collector and emitter *PN* junctions, with its parallel capacitance, and finally the load resistance R_L. The two circuits are coupled together by the *PN* junction between base and collector, so that the whole transistor circuit of Fig. 78 can be replaced by the equivalent circuit of Fig. 81.

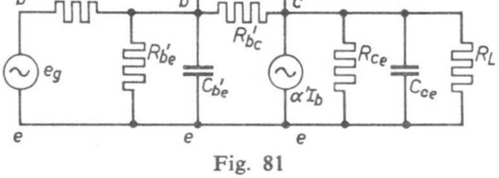

Fig. 81

The published values of these resistances and capacitances for the r.f. transistor type OC44 are as follows:

$R_{bb'}$	110 Ω		
$R_{b'e}$	2.6 kΩ	$C_{b'e}$	410 pF
$R_{b'c}$	2 MΩ	$C_{b'c}$	10.5 pF
R_{ce}	25 kΩ	C_{ce}	9 pF

Another transistor parameter which plays an important rôle in r.f. operation is the cut-off frequency $f_{c\alpha}$. It is found that the current-amplification factor α decreases in value at higher frequency, and the cut-off frequency is defined as the frequency at which α has dropped 3 dB (see Fig. 82). In addition, the cut-off frequency for a transistor in the grounded-emitter configuration is found to be α' times as low as the equivalent frequency for the grounded-base configuration.

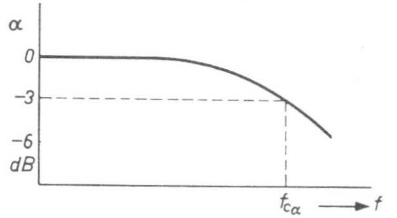

Fig. 82

$$\text{Thus } f_{c\alpha'} = \frac{f_{c\alpha}}{\alpha'}$$

After this general examination of the behaviour of the transistor at higher frequencies, we will proceed to discuss i.f. amplifiers.

Intermediate-frequency amplifiers

The i.f. amplifier has two functions:

1) To supply the necessary amplification.
2) To provide the requisite selectivity.

In this application, the load impedance of the transistor consists of one or more tuned circuits, depending on the selectivity and bandwidth which are required of the amplifier. We have already seen that in r.f. operation, the input and output circuits of a transistor are internally coupled by means of a resistance ($R_{b'c}$) and a capacitance ($C_{b'c}$). This means that there is a certain interaction of the collector circuit with the base circuit. This interaction takes place partly via the resistance $R_{b'c}$ and partly via the capacitance $C_{b'c}$. The interaction via the resistance is purely resistive, so that it shows itself as feedback, and thus causes a loss in amplification. The interaction via $C_{b'c}$ however, is not resistive, which means that part of the collector voltage fed to the input circuit experiences a phase shift. As a result, the band-pass curve of the i.f. amplifier will lose its symmetrical character (see Fig. 83) while in certain cases, instability may occur. It is thus desirable to compensate for this interaction as far as possible, by applying neutrodyning. The method employed is the one which is used with triode valves.

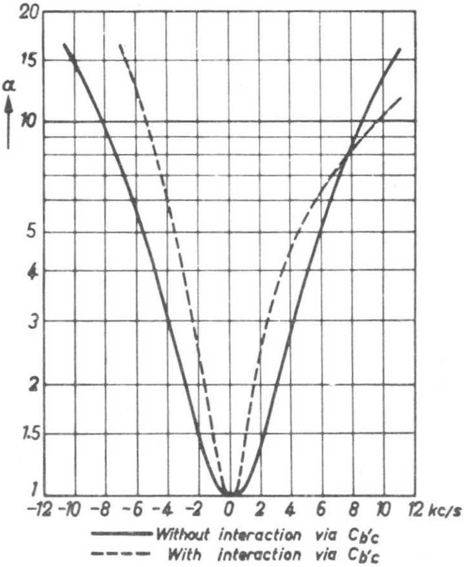

Fig. 83

Part of the collector voltage is conveyed to the base circuit in the correct phase to compensate for the voltage which is fed back internally. Sometimes, only the interaction via the capacitance $C_{b'c}$ is compensated, the interaction via $R_{b'c}$, which means a loss of amplification, being accepted.

Fig. 84 shows two frequently-used neutrodyne circuits. In the circuit of Fig. 84*a*, the compensating voltage is taken from the untuned coupling coil S_2, and is fed to the input circuit of the transistor via the parallel circuit consisting of R_1 and C_1 (neutro-

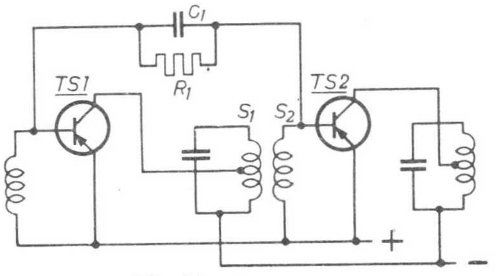

Fig. 84 a

dyne circuit). Care must be taken to obtain the right phase relationship for this feedback voltage. If it does not oscillate, an incompletely or incorrectly polarized circuit can be recognised from the asymmetrical form of the band-pass curve.

In the circuit of Fig. 84*b,* the two transistors are coupled together by means of a band-pass filter. This means that the voltage across the secondary circuit is not 180° out of phase, but 90° out of phase with the voltage across the primary circuit. Consequently the voltage required for neutrodyning cannot now be taken from the secondary circuit of the filter. In the circuit illustrated, this problem is solved by extending the coil S_1 (the primary winding of the r.f. transformer) by a few turns. The voltage induced in this extra winding (S_3) is 180° out of phase with the voltage across the winding S_1, and is fed back to the input circuit of the transistor *TS*1 via R_1 and C_1 in series. If the interaction is completely compensated by the neutrodyning, the circuit of Fig. 84*b* is equivalent to that of Fig. 85, in which the transistor is replaced by the corresponding network of capacitances and resistances. The resistance $R_{b'c}$ and the capacitance $C_{b'c}$ are omitted, because their influence has been compensated by the neutrodyning circuit.

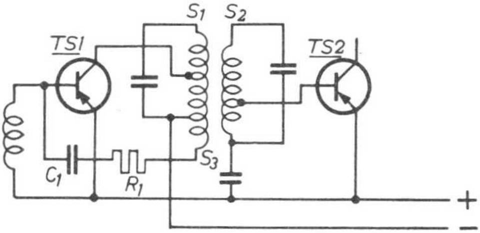

Fig. 84 b

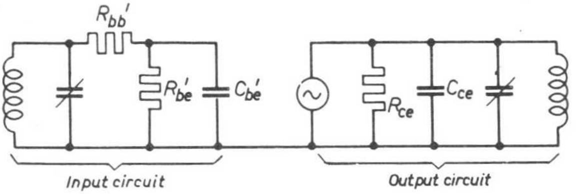

Fig. 85

From Fig. 85 we see that the capacitances $C_{b'e}$ and C_{ce}, which are respectively the input and output capacitance of the transistor, are connected in parallel with the tuning capacitors of the band-pass filters, and

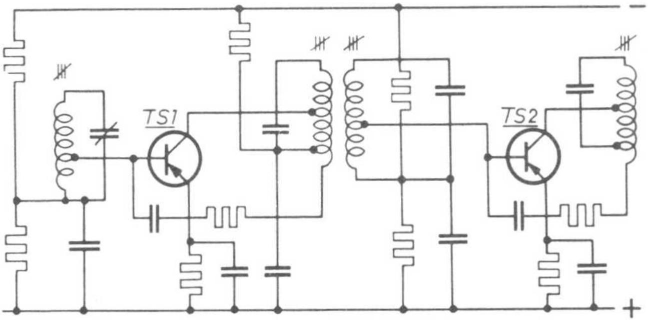

Fig. 86

thus form part of the tuning capacitance of the coupled circuits. In addition, the input and output resistances $R_{b'e}$ and R_{ce} cause a certain damping of the tuned circuits. This damping reduces the Q factor, usually to such an extent that matching has to be employed via a tap on the r.f. transformer. Fig. 86 shows the circuit diagram of a complete i.f. amplifier.

III Oscillator circuits

In principle, every oscillator circuit may be reduced to an energy-amplifying element, a source of supply, and a feedback circuit. The function of this last circuit is to feed part of the output energy back to the input circuit in the correct phase, and with the right magnitude. This means that little difference in circuit technique is to be expected between oscillator circuits employing thermionic valves as the amplifying element, and those in which amplification is provided by transistors.

Transistor oscillator circuits, however, must always take into account the thermal sensitivity of the transistors, as this thermal sensitivity influences the working point of the transistor, and thus the frequency. Consequently, special attention must be paid to thermal sensitivity if a stable and reproducible operating frequency is to be obtained.

In the circuit of Fig. 87, the feedback from output circuit to input circuit is obtained by means of the coupling coil S_2, which is tuned by C_3. The input circuit (considering only the a.c. circuit for the time being) is formed by the series circuit of base-emitter junction, coil S_3, C_2 and C_1

while the output circuit consists of the base-collector junction, S_1 and R_1. The two circuits have the base in common, and are coupled together inductively, so that part of the collector a.c. voltage is fed inductively into the emitter circuit. The correct relationship between the a.c. voltages in the two circuits is obtained by selection of the mutual winding ratios of coils S_1, S_2 and S_3. The d.c. circuit which sets the working point of the transistor, and provides the temperature stabilization, consists of the potential-divider R_1 and R_2, and the emitter resistor R_3. As far as alternating current is concerned, the transistor in this oscillator circuit is thus connected with common base, but for direct current, it is connected with common emitter.

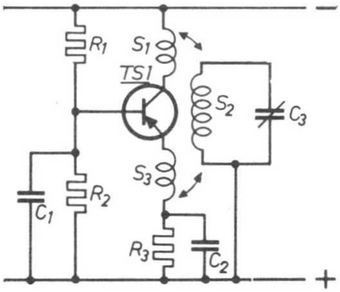

Fig. 87

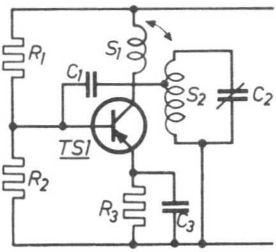

Fig. 88

Fig. 88 shows another oscillator circuit, in which the transistor is connected with common emitter for both alternating and direct currents. Part of the collector alternating voltage is injected into the base circuit via the coupling capacitor C_1. No further explanation will be required, but it should be noted that the choice of which oscillator circuit to use depends largely on the frequency range, and on any temperature variations which may occur. This is the reason why the circuit of Fig. 87 finds more application than that of Fig. 88. (Higher cut-off frequency and greater thermal stability.)

IV Mixer circuits

As a transistor has only three electrodes, mixing can only take place

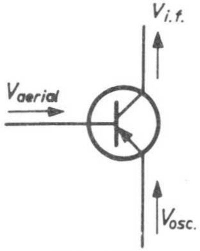

Fig. 89

according to the principle indicated in Fig. 89. The aerial signal is usually fed to the base (the most sensitive electrode in the grounded-emitter configuration), while the oscillator signal is injected into either the emitter or the base. The i.f. signal is then taken from the collector.

The current flowing in the input circuit of the transistor will depend on both the aerial signal and the oscillator signal, and on the curvature of the input characteristic (additive mixing). Consequently, the collector current, which is α' times as large, also contains components at both the sum and difference frequencies of the aerial and oscillator signals. The tuned circuits of the i.f. band-pass filters are set to one of these frequencies, in practice always the difference frequency, so that only the difference produces a voltage across the filters. As in i.f. amplifiers, there is here too a certain interaction of the collector circuit on the base circuit, via $C_{b'c}$ and $R_{b'c}$. In connection with the mixing process, however, this interaction is much more complicated, and can be devided into two catagories, namely:

1) Interaction under the influence of the mixing process.
2) Mixer interaction.

In the latter process, the i.f. signal is fed back to the aerial circuit via $C_{b'c}$, and is then mixed with the oscillator signal back to the aerial frequency.

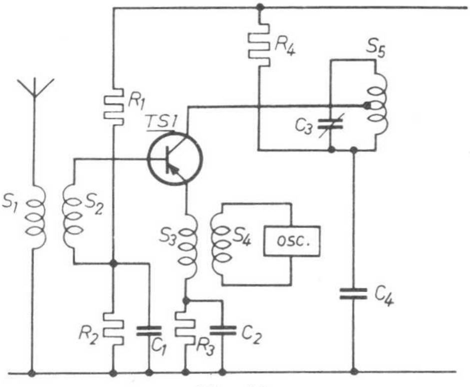

Fig. 90

The oscillator voltage required for the mixing process can either be supplied by a separate oscillator, or can be produced by the mixer itself. In the first case we speak of a pure mixer circuit, while the second type of circuit is usually known as a combined mixer circuit.

Fig. 90 shows a pure mixer circuit. The oscillator signal from a separate oscillator is injected into the input circuit of the mixer transistor via the r.f. transformer S_3-S_4, while the aerial signal is fed into this circuit by means of the transformer S_1-S_2.

By means of the potentiometer R_1-R_2, the working point of the mixer transistor is set on the bend of the input characteristic, so that the two signals are additively mixed. The i.f. signal is then taken from the tuned circuit C_3-S_5. This circuit has a disadvantage which is common to all additive mixer circuits, namely that the oscillator signal can reach the aerial, which then radiates it .

The combined mixer-oscillator circuit of Fig. 91 has the advantage over the circuit of Fig. 90, that it saves one transistor, i.e. the one in the separate oscillator. From the above discussion, the method of operation of this circuit should not require any further explanation.

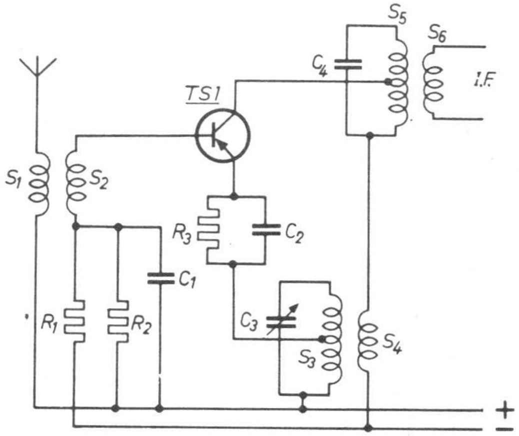

Fig. 91

V Detector circuits

As a general rule, receivers which have transistors as amplifying elements employ a crystal diode (a germanium or silicon diode) to detect the i.f. signal. If we temporarily neglect the much lower detection resistance, due to the low input resistance of the first a.f. transistor, we see that the detector circuit is exactly the same as the one employed in conventional circuits with thermionic valves. Fig. 92 shows a detector circuit in which the i.f. signal to be detected is taken from the secondary of the i.f. transformer, S_1-S_2. In order to prevent the detector circuit from damping the preceding i.f. circuit too much, the voltage to be detected is stepped down (The winding S_1 contains more turns than the winding S_2), but this

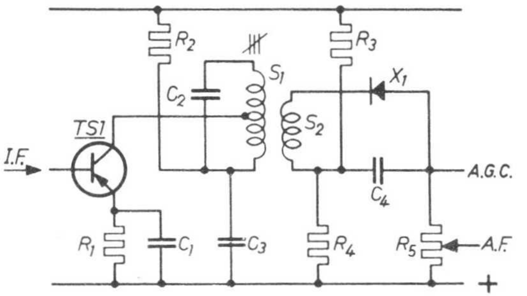

Fig. 92

means that the efficiency of the diode will drop.

The direct voltage produced across the detector resistor R_5, which is usually a potentiometer, depends on the amplitude of the unmodulated i.f. carrier wave and, just as in apparatus which uses thermionic valves, this voltage is used to control the operating conditions of one or more of the preceding amplifier stages (automatic gain control). This a.g.c. results in extra damping of the last i.f. circuit, and the a.g.c. voltage results in the diode being slightly biased in the forward direction. In order to keep the bias voltage very small, on account of detector distortion, it is partially compensated by the series circuit of resistors R_3 and R_4.

In the circuit of Fig. 93 the *PN* junction between base and emitter of the transistor *TS*2 functions as a detector diode. This circuit may be compared with a thermionic valve grid-detector circuit, as transistor *TS*2 both detects the i.f. signal and amplifies it. It has the disadvantage, that the detected i.f. signal is only slightly amplified, because the choice of the working point is partly determined by the fact that the transistor is functioning as a diode, and for this reason it is kept low.

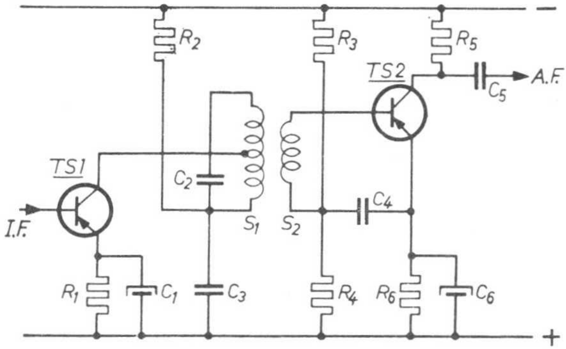

Fig. 93

VI Automatic gain control

The high sensitivity demanded of receivers on the one hand and the strong signals received from nearby transmitters on the other hand, mean that there must be some way of controlling the r.f. section, in order to prevent the last i.f. amplifier from being overdriven. In most transistor receivers, only one i.f. stage is regulated. Considerations of stability mean that the mixer stage is hardly ever regulated.

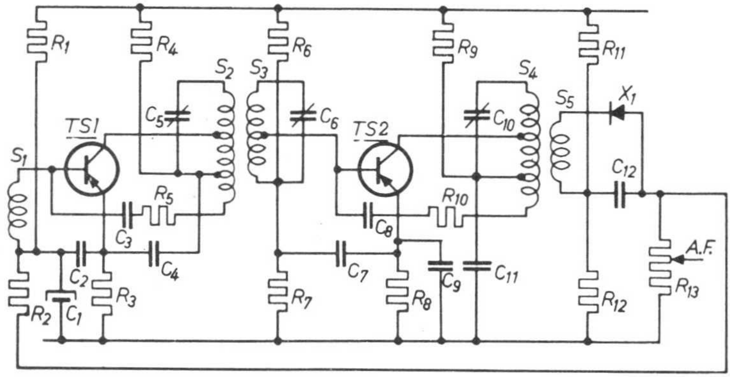

Fig. 94

For both transistors and thermionic valves, the amplification is regulated by shifting the working point. A change in the working point means a change in the values of the various transistor quantities such as α', R_i and R_o, to mention only a few, which affect the amplification and bandwidth of the amplifier. The disadvantage of this regulation is, that when the signal strength increases, the values of R_i and R_o also increase, so that the bandwidth becomes smaller. The movement of the working point is achieved by changing the base-emitter voltage. In the circuit of Fig. 94, the control voltage to bring about this change is taken from potentiometer R_{13}, which serves as volume control. The filter R_2-C_1 is inserted in order to prevent the a.f. signal from being superimposed on the control voltage, and so reaching the i.f. transistor which is being regulated. As a sensitive a.g.c. is usually obtained at the expense of stability, practical circuits have to make a compromise between a sensitive a.g.c. on one hand and, on the other hand, considerations of stability with reference to temperature variations and to spreads in the transistor characteristics.

CHAPTER VI

PRACTICAL HINTS FOR MOUNTING AND SERVICING

As far as size and robustness are concerned, a transistor is much more like components such as resistors, capacitors, etc. than the conventional radio valve. This difference is at once apparent in the method of mounting, as a radio valve is nearly always plugged into the circuit via a valve holder, while, apart from a few exceptions, a transistor is soldered directly to the wiring. In itself, this gives rise to one of the problems of mounting transistors, that is, thermal dissipation.

It has already been pointed out several times that transistors are very sensitive to temperature fluctuations, and also that the temperature of the *PN* junctions in the crystal must not exceed a specified maximum value. As explained in chapters IV and V, the first of these problems is solved by the use of special circuits. The extent of the second problem depends on the amount of heat developed in the transistor, and the amount of heat removed in unit time, or, in other words, on the thermal dissipation on one hand, and the position and method of mounting of the transistor on the other.

The maximum junction temperature is always published by the manufacturer and for Philips transistors it is 75° C (except for subminiature transistors such as the OC57, OC58, OC59 and OC60). If this temperature is exceeded, the transistor may suffer permanent damage. For example:

a) The soldered joints of the emitter and collector connections to the indium pellets may become loose (see Fig. 95)

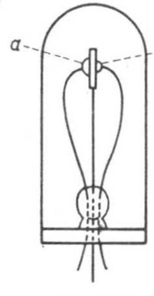

Fig. 95

b) The indium may diffuse too far into the *N* germanium, causing a change in the value of α', and, in many cases an increase in noise.

The effect of a) can be traced at once since the circuit stops working, but the second effect is much more difficult to localize. The first requirement which a transistor mounting has to satisfy thus refers to the transfer of heat to its surroundings. This transfer may take place either by conduction or by convection (transfer of heat to air flowing past the transistor).

Convection is usually sufficient for r.f. transistors, as the power involved is small, and there are considerable advantages in soldering the transistor directly into the wiring (short connections).

This is not so, however, for a.f. amplification, and in particular for output stages (OC16 and OC72A), as the power converted into heat in these transistors is much greater, and must be removed by conduction. Accordingly, the OC72A transistor is fitted with a mounting bracket which is clamped round the glass bulb, so that it can be screwed on to the chassis.

It should be noted that metals are the best conductors of heat, so transistors should be mounted on metal parts which are welded or screwed together. For example, do not mount an output transistor on a tagboard, as the metal parts are separated from each other by resin-bonded paper, which is a thermal insulator. In addition, the position of the transistors must also be carefully chosen, so that they do not receive heat from other components such as supply resistors, dial lamps, etc.

Whether the transistor is separately mounted or not, it must be soldered into the electric circuit, but if a good soldered connection is to be obtained, the point at which the connection is made must be hotter than the maximum temperature permissible for the *PN* junctions. Consequently, special precautions must be taken to prevent this heat from reaching the actual transistor element via the lead-in wires, as this could damage the transistor.

For this reason, the following three points must be observed:

a) The connection must be soldered quickly.

b) Flux-cored solder with a low melting point should be used.

c) The lead-in wires of the transistor must be held between the jaws of a pair of flat-nosed pliers while soldering, as shown in Fig. 96. Excess heat is largely removed by the pliers, and so does not reach the transistor element.

Transistors are sensitive to light, as well as to heat. For this reason, transistors having glass bulbs are always painted with black lacquer. After mounting a transistor, always check to see that the coating of lacquer has not been damaged during the process. If it has, paint over the scratch with black lacquer, or fit a length of black, or black-painted, insulation sleeving on to the transistor. To give only one example, damaged lacquer on a transistor in a radio set may cause an annoying hum, as the brightness of both incandescent and fluorescent lamps, particularly the latter, usually varies at a frequency of 100 c/s.

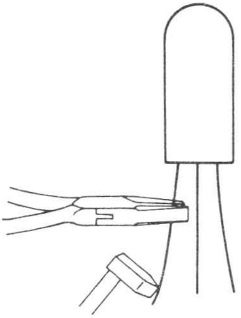
Fig. 96

Always check that the leads of a transistor have been connected in the right way (i.e. that the collector and emitter connections have not been interchanged). If these connections have been interchanged, the apparatus will still work, but the circuit will be much less sensitive, while the emitter, now operating as collecter, will quickly become overloaded. (With a.f. and output transistors, this will occur under normal operating conditions.)

Overvoltage, that is, an excessive voltage between collector and emitter, may badly damage a transistor, even if it does not destroy it. This depends on the collector load, so it is very important to prevent this load being short-circuited while soldering or making measurements. If any soldering is to be done, the apparatus should be switchend off first, and if measurements are being made with a bare probe, special care must be taken to avoid causing short circuits.

Voltage measurements on transistor circuits must be made with meters having a high internal resistance (about 10,000 Ω/volt or more) as otherwise the sum of the current drawn by the instrument, and the normal load current, may exceed the maximum permissible current for the particular operating conditions in question, and may damage the transistor.

In receivers having a high supply voltage (e.g. 12 V, as in a car radio) the loudspeaker must not be disconnected from the secondary of the output transformer without taking special precautions. If these precautions are neglected, the alternating voltage between collector and emitter will become too great, and the *PN* junctions in the crystal may break down. If it is essential to remove the loudspeaker for some reason, the *volume control* of the receiver must first be *turned right down.*

Reducing the load resistance, or short-circuiting it, which is still worse, results in overloading of the output transistor(s), and is practically certain to damage them sooner or later. Consequently, the secondary of the output transformer must never be made smaller than the size calculated for efficient operation of the circuit. For example, no extra loudspeakers may be connected directly to the output. If it is required to connect an external speaker, it is recommended that this should be done in such a way that the internal loudspeaker is automatically disconnected when the external plug is inserted in the set.

Summarizing the above points, we can state the following 5 rules:

1) Before carrying out repairs, or doing any soldering, the apparatus should be switched off.

2) Voltage measurements should be made with a meter which has a sufficiently high internal resistance.

3) When deciding the position of a transistor, and the method of mounting to be employed, always take its thermal sensitivity into account.

4) Never short-circuit or disconnect the load without taking suitable precautions. In both cases, the transistor may be seriously damaged if these are neglected.

5) If a transistor appears to be faulty, always check that this is not due to a fault in another component, e.g. in the decoupling capacitor across the emitter resistor.

Designation systems

Transistor manufacturers have developed a number of codes for designating any given type of transistor. The following tables 1) give the key to:

a. the old European code

b. the new European code.

The old European code

OCP 70

First letter	Second letter	Third letter (only for specific characteristics)	Numbers
The first letter is always an O	A Diode C Transistor R Diode with resistor characteristics	P Photosensitive Z Zener diode	One or more numbers relating to the design

---

1) Th. Kroes, Tube and semi-conductor selection guide 1960/61, Philips Technical Library, Centrex Publishing Company, Eindhoven, 1960.

The new European code

AF 102

First letter		Second letter		Serial number	
A	Germanium	A	Diode	For commercial applications, this is between 100 and 999	For other than commercial applications, the serial number consists of a letter and two figures, e.g. Z 10 Y 12 etc.
B	Silicon	C	Transistor for a.f. amplification		
		D	Power transistor (for a.f. amplification)		
		E	Tunnel diode		
		F	Transistor for r.f. amplification		
		L	Power transistor (for r.f. amplification)		
		P	Photosensitive semiconductor		
		S	Switching transistor		
		T	Thyristor, Shockley diode, controlled rectifier		
		U	Power switching transistor		
		Y	Power diode		
		Z	Zener diode		

AT Z 10

CHAPTER VII

MEASUREMENTS

As with thermionic valves, the various characteristics of transistors can be determined by measurement. In this chapter we shall see how a number of the quantities described in previous chapters can be measured. Although the measurements are described for a transistor connected with grounded emitter, it will be obvious that they are also applicable to the other basic configurations provided that the polarities of the batteries are changed.

The descriptions cover the measurements of:

1) The I_c-V_{ce} characteristic.
2) The value of α'.
3) The I_b-V_{be} characteristic.
4) The input resistance.
5) The output resistance.
6) The value of I_{co}'.
7) The value of the cut-off frequency $f_{c\alpha}'$.

1) Determination of the I_c-V_{ce} characteristic

This characteristic is determined by means of the test circuit illustrated in Fig. 97. It gives the relationship between the voltage V_{ce} (between collector and emitter) and the collector current I_c for different values of the base current I_b. As there is a full discussion of the characteristic in Chapter III, we shall not go into any further details here.

Switch S_1 is first closed, and the base current I_b is adjusted to the required value by means of the potentiometer R_{pb}. The current may be read from meter I_1 (For some types of transistor, this mA meter must be replaced by a μA meter). Switch S_2 is now closed, and the collector voltage is increased by means of potentiometer R_{pc}, noting the corresponding values of I_c and V_{ce} at intervals. The base current must not vary during this operation, and so must be readjusted as necessary.

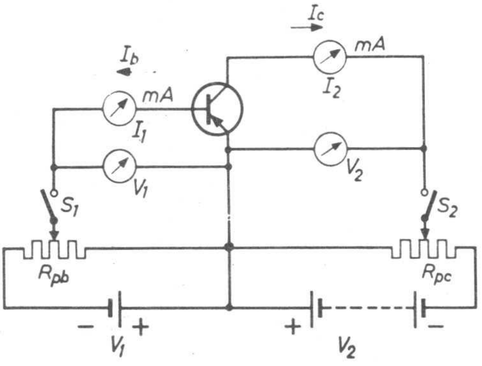

Fig. 97

2) Determination of α'

The same test circuit is also used for this measurement. The transistor manufacturer usually quotes the value of α' for particular values of V_{ce} and I_b. In order to check the current amplification factor α' of a transistor, the operating conditions must first be adjusted (by means of potentiometers R_{pb} and R_{pc}) so that the current I_b is, say, 100 μA above the published value, while the collector voltage is adjusted to the published value. The current which now flows in the collector circuit may be termed I_{c1} and the corresponding base current, I_{b1}. The base current is now set at 100 μA below the published value while the collector voltage is kept constant. In this case, the current in the collector circuit will be I_{c2}, and the corresponding base current, I_{b2}.

The current amplification factor α' can be calculated from:

$$\alpha' = \frac{I_{c1} - I_{c2}}{I_{b1} - I_{b2}}$$

It should be remembered that the selected variation in I_b depends on the type of transistor which is being tested. Although a variation of 100 μA has been quoted in this description, the figure may need to be considerably smaller, say 20 μA, for some types of transistor.

3) The I_b-V_{be} characteristic

This characteristic, which gives the relationship between the voltage V_{be} (between base and emitter) and the base current I_b for various values of the collector voltage V_{ce}, has already been discussed in full in Chapter III. Consequently, we shall not examine the characteristic itself at this point.

The I_b-V_{be} characteristic can also be measured with the circuit of Fig. 97. The procedure is as follows. Switch S_2 is closed, and the voltage V_{ce} is adjusted to the required value. Switch S_1 is now closed and voltage V_{be} is increased, the corresponding values of current and voltage (I_b and V_{be} respectively) being noted at intervals. The value of V_{ce} must not be allowed to vary during this operation; if necessary, it must be readjusted by means of the potentiometer R_{pc}.

If it is also required to determine the portion of the characteristic for which the emitter is negative in relation to the base, the battery which supplies voltage V_1 must be reversed.

4) The input resistance

If the input resistance is mentioned, the first thing to do is to find out whether it is the d.c. resistance or the a.c. resistance which is intended. The d.c. resistance is determined from the quotient of the voltage V_{be} and the current I_b, at a constant value of V_{ce}.

$$R_{i=} = \frac{V_{be}}{I_b} \quad (V_{ce} = \text{constant}).$$

and can thus be determined with the circuit of Fig. 97. By contrast the determination of the a.c. resistance is rather more complicated. It can be determined with the circuit of Fig. 97, in the form of the quotient of the difference between two voltages and the difference between the corresponding currents or mathematically

$$R_{i\sim} = \frac{V_{be1} - V_{be2}}{I_{b1} - I_{b2}} \quad (V_{ce} = \text{constant}).$$

For example if the R_i of a transistor is to be determined for $V_{be} =$ 100 mV and $I_b =$ 100 μA, the d.c. resistance is

$$R_{i=} = \frac{100{,}000}{100} = 1000\ \Omega.$$

while the a.c. resistance is given by

$$R_{i\sim} = \frac{(100\text{ mV} + 1\text{ mV}) - (100\text{ mV} - 1\text{ mV})}{I_{b1} - I_{b2}}$$

where I_{b1} is the current corresponding to the voltage (100 mV + 1 mV) and I_{b2} is the current corresponding to (100 mV − 1 mV).

After the description of the measurement of α', no further information will be required on the measurement of $R_{i\sim}$ itself.

5) The output resistance

The output resistance is defined as the quotient

$$\frac{V_{ce}}{I_c} \text{ (for } I_b = \text{ constant).}$$

Like the input resistance, this resistance may be either an a.c. resistance or a d.c. resistance.

The d.c. resistance is

$$R_{o=} = \frac{V_{ce}}{I_c}$$

(with I_b adjusted to a constant value).

The a.c. resistance is

$$R_{o\sim} = \frac{V_{ce1} - V_{ce2}}{I_{c1} - I_{c2}}$$

and can be determined without difficulty by using the circuit of Fig. 97 and the procedure described for the determination of α'.

6) Determination of I_{co}'

A knowledge of the size of I_{co}' is of great importance in connection with the temperature stability of the circuit. This has been discussed in Chapter IV, so no further reference need be made to it here. The transistor manufacturer usually quotes the value of I_{co}' for a particular value of V_{ce} and a particular temperature, say 25° C.

Fig. 98 shows a test circuit for determining the value of I_{co}'. The voltage V_{ce} is adjusted to the manufacturer's published value by means of the potentiometer R_{pc}, and the value of I_{co}', can then be read from the μA meter.

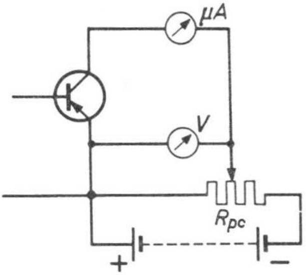

Fig. 98

7) The cut-off frequency f_{ca}'

The cut-off frequency is defined as the frequency at which the current amplification factor α' has dropped 3 dB. It was mentioned in Chapter V in connection with circuits incorporating r.f. transistors. Fig. 99 shows a test circuit for determining this cut-off frequency. First of all, the working point of the transistor is established by adjusting I_b, I_c and V_{ce} to the published values by means of potentiometers R_{pb} and R_{pc}. Next a 1000 c/s signal, provided by the signal generator, is fed to the input circuit of the transistor. The current-

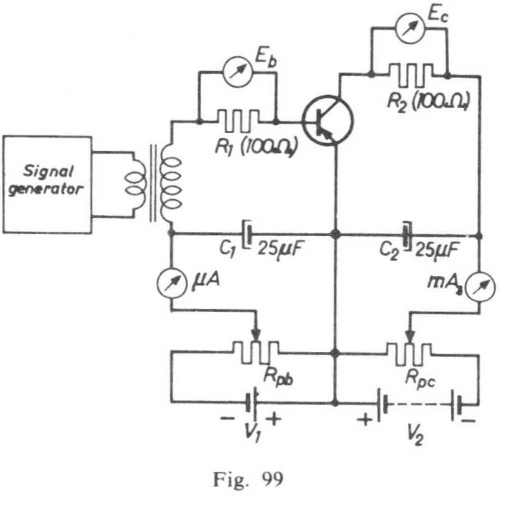

Fig. 99

amplification factor α' is now given by the ratio $\frac{I_{c\sim}}{I_{b\sim}}$ and is also equal to $\frac{E_{c\sim}}{E_{b\sim}}$, as the two resistances are equal ($R_1 = R_2 = 100\ \Omega$). If the frequency is now increased, the value of α' will begin to decrease after a certain frequency is reached (see Fig. 82 of Chapter V). The frequency at which the ratio $\frac{E_{c\sim}}{E_{b\sim}}$ drops to 0.7 (3 dB down) of its normal value is the cut-off frequency.

It will be obvious that the measurements described here cannot give exact results, but only an approximate idea of the characteristics of the transistor.

To obtain accurate results, special laboratory measurements must be carried out, but any discussion of these measurements would be outside the scope of this booklet.

Finally, it should be mentioned that a transistor can quickly be examined for short circuits or open circuits by means of an ohmmeter (see Fig. 100). This measurement is based on the fact that a transistor allows current to pass in one direction with ease, but acts as a high resistance to current flowing in the opposite direction. This test cannot be applied to miniature transistors, and the ohmmeter must operate with a current less than 2 mA and a terminal voltage below 3 volts.

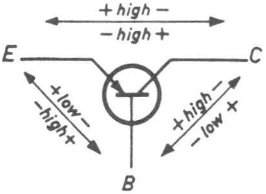

Fig. 100

CHAPTER VIII

PULSE TECHNIQUES

Current and voltage pulses are usually produced by the sudden opening and closing of switches. These switches are almost always electronic, because the circuit must usually be closed or opened in a very short time, and mechanical switches are too slow. Both the thermionic valve and the transistor can be used as an electronic switch, but within the scope of this book we shall only deal with circuits in which a transistor functions as switch. However, before we proceed to study the various possible methods of switching, we must first investigate how current and voltage pulses are produced.

1) Circuit with battery and resistor

Fig. 101 shows a circuit consisting of a battery, a switch S and a resistor R. If the switch is open, no current flows through the circuit and the

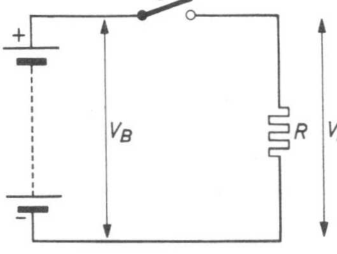

Fig. 101

voltage across the resistor is zero. If the switch is closed, a voltage V_R, equal to the battery voltage V_B, appears across the resistor at the instant when the switch closes the circuit, while a current of $\frac{V_R}{R}$ amperes flows through the circuit. (It is assumed that the battery has no internal resistance).

It is as if the voltage across the resistor jumped from zero to V_B volts at the instant when the circuit was closed, and for this reason we refer here to the occurence of a voltage step. If the switch is opened again after a certain time, the circuit is opened once more and the voltage across the resistor drops from V_B volts to 0 volt. Fig 102a indicates the voltage across the resistor, plotted against time. At instant t_1, switch S is closed, and at instant t_2 it is opened. The variation of the current in the circuit is indicated in Fig. 102b, and will need no further explanation.

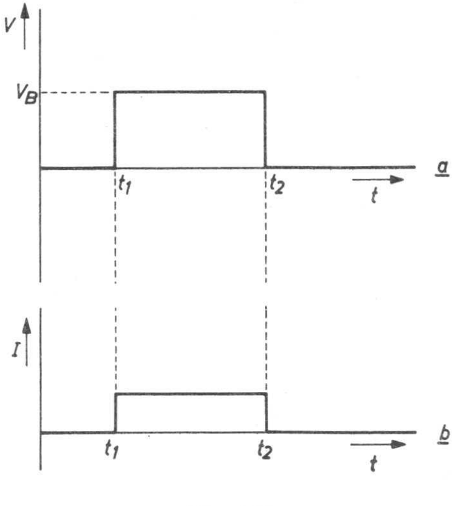

Fig. 102

2) Circuit with battery, resistor and capacitor

Fig. 103 shows a circuit consisting of a battery, a resistor and a capacitor. If the switch S is open, both the voltage across the resistor (V_R) and the voltage across the capacitor (V_C) are equal to zero. (It being assumed that there is no charge on the capacitor). At the instant of closing switch

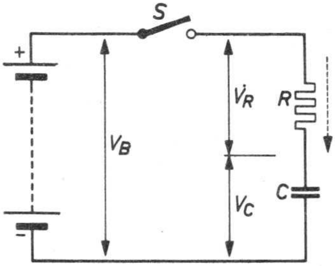

Fig. 103

S, there is a voltage V_B (the battery voltage) present across the series circuit of resistor and capacitor. The variation of this voltage is illustrated in Fig. 104a. The voltage thus increases from 0 to V_B volts at the instant of closing the switch (t_1) and this voltage V_B will cause a current to flow in the circuit, and to charge the capacitor C. The current is maximum directly after the switch is closed, because there is then no charge on the capacitor, which consequently behaves as a short circuit. At the instant of switching on, therefore, $V_C = 0$ so that $V_B = V_R$ and the current which flows in the circuit is equal to $\frac{V_R}{R} = \frac{V_B}{R}$

A short time later, (t seconds), the charge on the capacitor is Q_t coulombs (because the current which has been flowing in the circuit during this time has charged the capacitor ($Q_t = i x t$). This means that the voltage across the capacitor has risen from 0 volt to V_{Ct} volts ($V_{Ct} = \frac{Q_t}{C}$). As a result, the current in the circuit has decreased, because this current depends on two factors, i.e. :

a) The voltage difference between the battery voltage V_B and the voltage across the capacitor V_C.

b) The value of the resistor R.

or in mathematical form,

$$i = \frac{V_B - V_C}{R} = \frac{V_R}{R}$$

Consequently, the voltage across resistor R has also dropped, which goes without saying, because $V_R = V_B - V_C$. After a certain time a state of equilibrium is established, when the capacitor is completely charged, so that $V_C = V_B$ and $V_R = 0$, with the result that no more current flows in the circuit. Figs. 104b and 104c show the voltage variation across the resistor and the capacitor respectively.

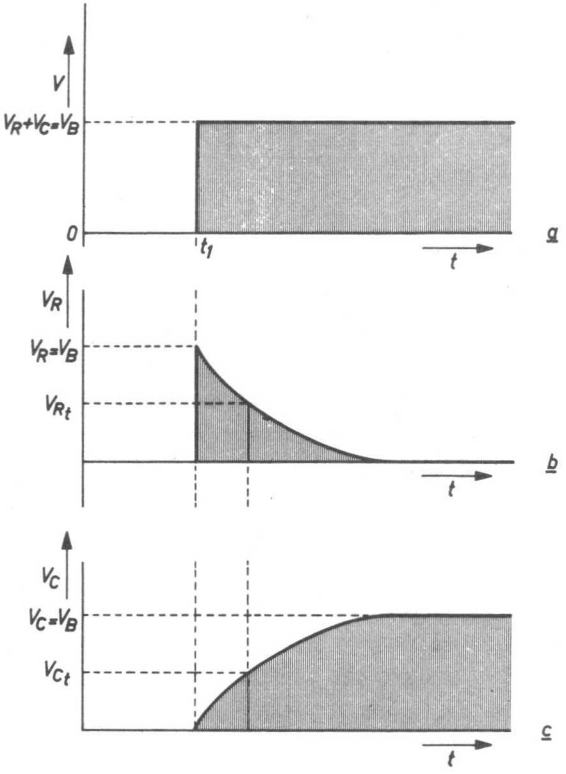

Fig. 104

It follows from the above that a certain time is required to charge the capacitor. This time depends on two factors, i.e. the size of the capacitor and the size of the resistor. If the resistance and/or the capacitance of the capacitor are increased, it will require longer to charge the capacitor completely. Mathematical considerations which fall outside the scope of this book show that there is a certain relationship between the value of the current which flows through the circuit t seconds after switch S has been closed, and, on the other hand, the size of the resistor and the capacitor. Expressed mathematically, this relationship is

$$i_t = i_{\max}\, e^{\frac{-t}{RC}} = \frac{-V_B}{R}\, e^{\frac{-t}{RC}} \qquad (1)$$

In this expression V_B is the battery voltage in volts.

R is the resistance in ohms.
C is the capacitance in farads.
t is the time in seconds.
i is the current flowing in the circuit, in amperes.
e is the base of natural logarithms.
($e = 2.72$).

Before going any further, we must explain what is meant by the RC time of a circuit. Equation (1) indicates that the current flowing in this circuit t seconds after the switch is closed, is equal to the maximum value of the current, divided by e to the power $\frac{t}{RC}$. Now mathematicians tell us that an exponent is always a pure number, (for example, a^4 equals a x a x a x a), so that $\frac{t}{RC}$ must also be a pure number. This means that the product of R and C must have the dimension of time, since t also has this dimension. Like t therefore, the quantity RC is expressed in seconds. If we refer to the RC time of a circuit, we mean the time at which $t = RC$ or, in other words, when $\frac{t}{RC} = 1$.

Example : a) Suppose that R has a resistance of 1 MΩ and C has a capacitance of 0.1 μF.
The RC time of the circuit is therefore : R (in ohms) x C (in farads) = t (in seconds) = $10^6 \times 0.1 \times 10^{-6}$ = 0.1 seconds.

b) Assume also that the battery voltage $V_B = 100$ volts. The maximum current which flows through the circuit (at the instant of closing the switch) is equal to :

$$i_m = \frac{V_B}{R} = \frac{100}{10^6} = 100 \times 10^{-6} \text{ A} = 100 \ \mu\text{A}.$$

c) After 0.1 seconds, equation (1) indicates that the current is equal to

$$i = i_m e^{\frac{-t}{RC}} = 100 \times 10^{-6} \times e^{\frac{-0.1}{0.1}} = 100 \times 10^{-6} \times e^{-1}$$

Fig. 105 shows us that $e^{-1} = 0.37$, so that the current flowing through the circuit 0.1 sec after the switch is closed, is equal to $0.37 \times 100 \times 10^{-6}$ A $= 37 \ \mu$A.

d) At that instant, the voltage across the resistor is : $V_R = i \times R = 37 \times 10^{-6} \times 10^6 = 37$ V, and the voltage across the capacitor 100—37 = 63 V.

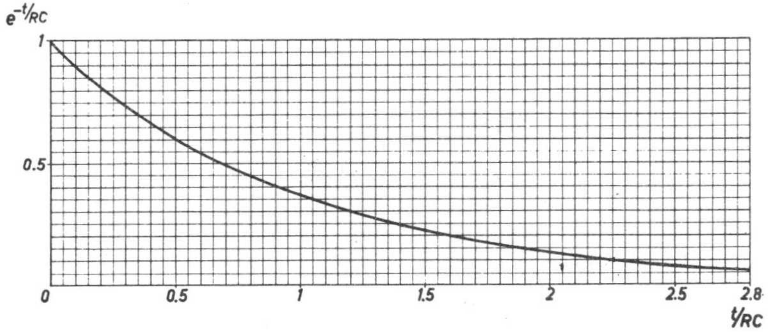

Fig. 105

In Fig. 106, curve *A* is the voltage across the series circuit of *R* and *C* plotted as a function of time. Switch *S* is closed at instant t_1 and opened at instant t_2. At instant t_2, therefore, this voltage drops to $V_{C\,t2}$. (Which is logical, because the circuit is interrupted at that instant). Curve *B* represents the voltage across the resistor as a function of time, while curve

C represents the voltage across the capacitor as a function of time. At instant t_2, the voltage across the capacitor is $V_{C\ t2}$ and the voltage across the resistor is $V_{R\ t2}$; but $V_{C\ t2} + V_{R\ t2} = V_B$, because $V_R + V_C = V_B$ for every intermediate instant.

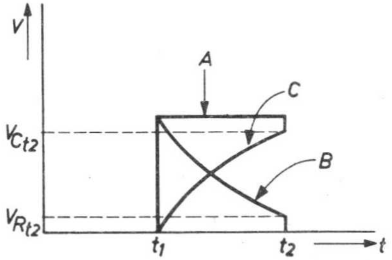

Fig. 106

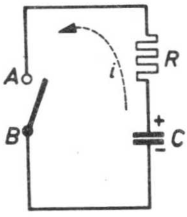

Fig. 107

Up to the present, we have only dealt with the effects which occur when a capacitor is being charged. When a capacitor is discharged through a resistor, however, the situation is different. Fig. 107 shows a circuit consisting of a capacitor C, a switch S and a resistor R. If the switch is open, no current flows, and the voltage between points A and B will be equal to the voltage across the capacitor, V_C. If the switch is closed, the voltage between points A and B drops from V_C to zero. A current now flows in the circuit, discharging the capacitor. The current is a maximum at the instant of closing the switch, and then decreases as the capacitor discharges.

The discharge can again be expressed as a time function, in the form of an equation. The current flowing through the circuit is then equal to:

$$i = i_m e^{\frac{-t}{RC}} = \frac{V_C}{R} e^{\frac{-t}{RC}} \qquad (2)$$

To sum up, therefore, we can state that the current in an RC network varies as an exponential function of time, for both charging and discharging the capacitor, but with this difference, that when the capacitor is discharging, the direction of the current is opposite to that of the charging current.

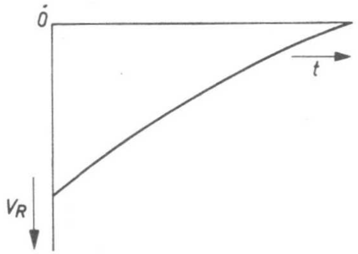

Fig. 108

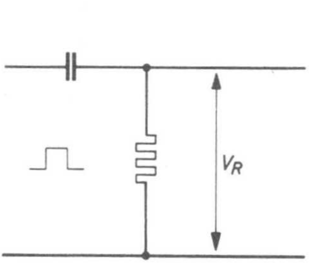

Fig. 109

Fig. 108 shows the voltage across the resistor (V_R) as a function of time, when the capacitor is discharging. If Fig. 104b is compared with Fig. 108, it will immediately be seen that in Fig. 104b the voltage across the resistor R is plotted above the time axis, while for the discharge the voltage is plotted below the time axis. The reason for this is the difference in the polarity of V_R for charging and discharging. In this connection, compare Figs. 103 and 107, where this polarity is also indicated.

3) The differentiator network

Fig. 109 shows the RC circuit of Fig. 107 drawn in a slightly different manner. Circuits of this type, which are frequently employed in pulse techniques, are termed differentiator networks. We will now investigate the variation of the voltage across the resistor R, if a pulse voltage, as illustrated in Fig. 110a, is conveyed to the input of the differentiator network, for the two cases $RC > t$ and $RC \ll t$.

$RC > t$.

At the instant when the first voltage step occurs, (t_1), the voltage across the resistor will be V volts. This voltage then decreases in value, due to capacitor C becoming charged. Since $RC > t$, the capacitor will only be charged to a small extent, or in other words V_R will have dropped little, when the second voltage step occurs (at instant t_2). At that instant, the capacitor starts to discharge through resistor R, so that the polarity of the voltage across this resistor reverses. The voltage variation across the resistor is indicated in Fig. 110b.

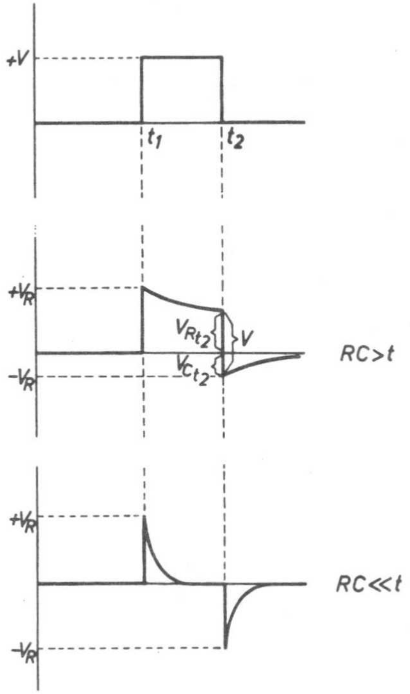

Fig. 110

$RC \ll t$.

At the instant at which the first voltage step occurs, (t_1), the voltage across the resistor will increase from 0 to V volts. This voltage then decreases rapidly, because the capacitor becomes charged very quickly, so that V_C rapidly increases in value. At instant t_2, at which the second voltage step occurs, the capacitor is already completely charged, so that V_R is zero. After the new voltage step, the capacitor, across which the voltage $V_C = V$ volts, will again discharge rapidly. For this case, the variation of the voltage across the resistor is as indicated in Fig. 110c.

In the above considerations, it was tacitly assumed that the switch opens and closes the circuit instantaneously or, in other words, the switch is opened and closed in an infinitely short time. It will be obvious that this cannot be obtained with mechanical switches, so that electronic switches must be employed. These electronic switches are usually based on certain characteristics of thermionic valves or transistors. In the following discussion, we shall deal particularly with switches in which the switching element is a transistor.

4) The transistor as a switch

Fig. 111 shows a circuit in which a transistor functions as a switch. The transistor is connected in such a way that the collector has a negative potential relative to the emitter. In the base circuit of this transistor (the transistor is connected in grounded emitter), the base has a small positive bias relative to the emitter, so that no current flows, either in this circuit or in the collector circuit. The transistor is thus cut off, and behaves as an open switch. The situation changes, however, if a voltage pulse appears in the base circuit, so that the base suddenly becomes negative in relation to the emitter. At that instant, a current will start to flow in the base circuit and, as a direct result of this, a current will also start to flow in the collector circuit. The transistor is now operating as a closed switch.

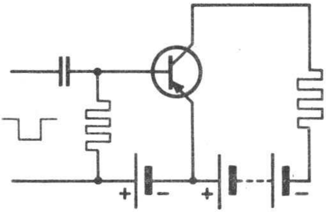

Fig. 111

So far, we have described the principle of operation of a transistor when used as a switch, but we have only discussed the actual switch, and not the device which operates the switch, i.e. which opens and closes it. This device, which is also electronic, consists of a circuit which supplies the voltage or current pulses required in order to make the transistor conductive, or to cut it off. In the course of time, a number of such circuits have been developed, a few of which we shall now discuss.

5) The astable multivibrator

Fig. 112 is the circuit diagram of a two stage resistance-coupled amplifier, in which the collector a.c. voltage of transistor *TS*2 is conveyed to the base circuit of transistor *TS*1 via a capacitor. In Fig. 113, the circuit of Fig. 112 is re-drawn in a more familiar manner. It is assumed that the two transistors are completely identical, and also that $R_1 = R_2$; $C_1 = C_2$ and $R_3 = R_4$.

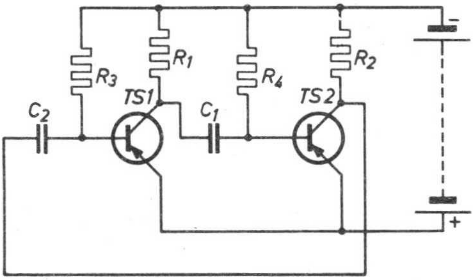

Fig. 112

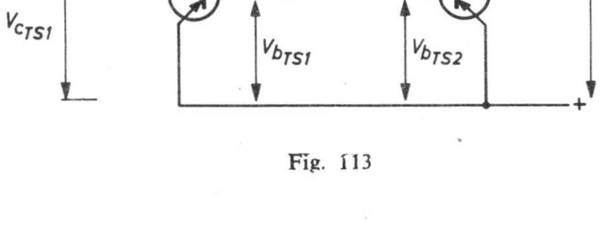

Fig. 113

We start with both the transisors conductive. The symmetry of the circuit will mean that $I_{c\ TS1}$ is equal to $I_{c\ TS2}$ and $V_{b\ TS1}$ is equal to $V_{b\ TS2}$. A small disturbance of this symmetry, for example an increase in $I_{c\ TS1}$, causes the voltage across R_1, ($I_{c\ TS1}$ x R_1), to increase and the collector voltage of $TS1$ to decrease. This voltage variation is passed on to the base of $TS2$, because $V_{c\ TS1} = V_{C1} + V_{b\ TS2}$. The result is that the base becomes less negative, so that $I_{c\ TS2}$ drops in value, causing an increase in $V_{c\ TS2}$. In turn, the change in $V_{c\ TS2}$ is conveyed to the base of $TS1$, because $V_{c\ TS2} = V_{b\ TS1} + V_{C2}$. The direct result of the increase in $V_{c\ TS2}$ is thus that the base of $TS1$ becomes more negative, and this in turn causes an increase in $I_{c\ TS1}$. This process, which is cumulative, finishes with the base of $TS2$ becoming positive. The immediate result is that this transistor cuts off, while the collector current of transistor $TS1$ reaches its maximum value. We now have a stable condition in which $TS1$ is "on" and $TS2$ is "off".

During this process, which is completed in an extremely short time, the charge on capacitors C_1 and C_2 hardly alters at all. However, when the stable condition referred to above is reached, capacitor C_1 becomes charged, because it is included in the series circuit $R_4 — C_1 — R_{i\ TS1}$.

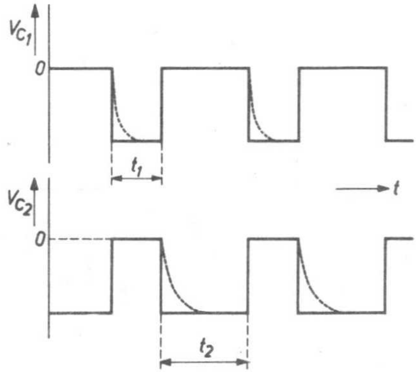

Fig. 114

This means that the base voltage of $TS2$ becomes negative again after a certain time (depending on the values of R_4 and C_1), which in turn causes transistor $TS2$ to become conductive once more, so that $V_{c\ TS2}$ decreases. The change in $V_{c\ TS2}$ is again passed on to the base of transistor $TS1$, since $V_{c\ TS2} = V_{C2} + V_{b\ TS1}$, with the result that the base of $TS1$ becomes less negative. This means that the process described above commences once more, and ends with $TS2$ being conductive and $TS1$ cut off.

The time for which this stable condition is maintained depends on the size of R_3 and C_2. Fig. 114 shows the variation of the collector voltage as a function of time. After the above explanation, the reasons for the shape of this curve will be obvious, but it should be mentioned that, as a general rule, the voltage steps are not so steep as indicated in the figure.

6) The bistable multivibrator

Another type of multivibrator circuit is the bistable multivibrator, also termed the flip-flop. A multivibrator of this type has a number of stable conditions, i.e. :

a) Transistor $TS1$ on and $TS2$ off.
b) $TS1$ off and $TS2$ on.
c) Both transistors on.
d) Both transistors off.

In this case, an external voltage pulse is required to make the transistor in the off condition become conductive, and vice versa.

Fig. 115 shows the circuit diagram of an arrangement of this type. When the circuit is connected to the batteries, it may adopt any one of the possible states, depending on the dimensioning of the resistances $R_1 — R_2 — R_3$ and $R_4 — R_5 — R_6$, i.e. on the working points of the two transistors. For example, if we assume that both transistors are conductive, and that a positive voltage pulse is conveyed to the base of $TS1$ at a given instant, this transistor will cut off, or in other words, $I_{c\ TS1}$ will become zero. This means that $V_{c\ TS1}$ suddenly increases. This increase in $V_{c\ TS1}$ is conveyed via C_2 to the base of $TS2$, which therefore suddenly becomes more negative, causing an increase in $I_{c\ TS2}$ and a decrease in $V_{c\ TS2}$. This condition is maintained until capacitor C_2 has discharged,

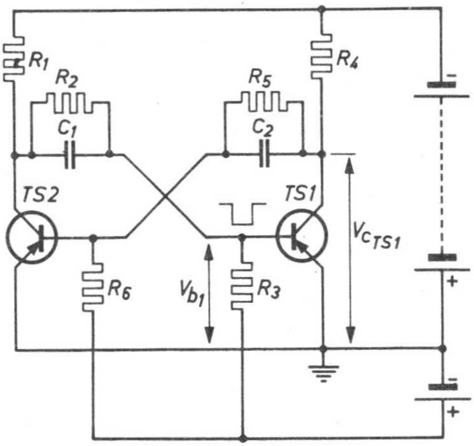

Fig. 115

after which $V_{b\ TS2}$ again becomes less negative ; $I_{c\ TS2}$ drops in value and $V_{c\ TS2}$ increases. This last change is passed on to the base of $TS1$ via C_1, after which the original stable condition is restored. As these voltage variations are again cumulative, they will take place very rapidly, as with the astable multivibrator.

7) The blocking oscillator

The blocking oscillator, the circuit of which is shown in Fig. 116, is a completely different type of relaxation oscillator. The primary winding of transformer T, which provides the coupling between the base and collector circuits, is included in the collector circuit, while the secondary winding forms part of the base circuit.

Let us assume that the capacitor is charged, and also that the voltage resulting from this charge has the polarity which is indicated in the circuit of Fig. 116. The voltage between base and emitter, (E_{be}), is then $E_{be} = (-V_{be} + V_C)$ volts. In this expression, V_{be} is the battery voltage and V_C is the voltage across the capacitor. Let us assume for the time being that V_C is greater than V_{be}, which means that E_{be} is positive, or in other words, that the base is positive in relation to the emitter. As a result, the transistor is cut off. The capacitor C now discharges via resistor R, with the result that the capacitor voltage V_C drops, which means that E_{be} also becomes smaller. At the instant at which E_{be} becomes negative, i.e. when $V_C < V_{be}$, the transistor is no longer cut off, and a current I_c will start to flow in the collector circuit and will increase in value. As a result of the mutual inductance of the primary and secondary windings of the transformer, a voltage V_L is induced in the secondary winding.

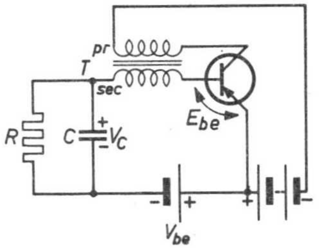

Fig. 116

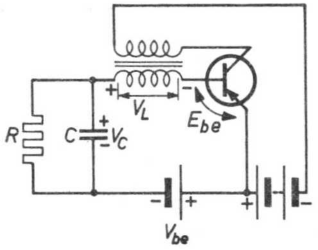

Fig. 117

($V_L = —L \frac{di_c}{dt}$). At the instant at which I_c starts to flow, the voltage across this winding increases from 0 to V_L volts, and remains constant, because the quotient $\frac{di_c}{dt}$ remains constant.

The secondary winding is connected in the base circuit in such a way that the polarity of the voltage across this winding is as indicated in Fig. 117, which means that the voltage between base and emitter is constant, since $E_{be} = (—V_{be} + V_C — V_L)$. The reason for voltage E_{be} remaining constant is that the process which we have just described takes place extremely rapidly in contrast to the discharge of the capacitor. There is thus a constant current I_b flowing in the base circuit.

Before continuing, we must study the I_c - V_{ce} characteristic of a transistor more closely. In this characteristic, which is drawn in Fig. 118, two important regions may be distinguished. These are the region in which a small change in V_{ce} causes a large change in I_c, and the region in which the characteristic is practically horizontal. In the process described above, in which I_b remains constant, point A (the knee voltage) is a critical point, which determines the further course of the process.

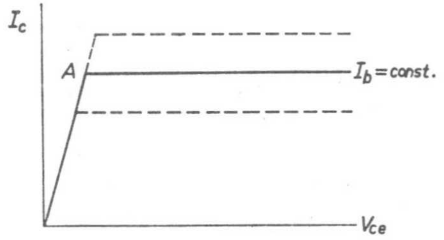

Fig. 118

The current in the collector circuit will increase in direct proportion to the time ($\frac{\mathrm{d}i_c}{\mathrm{d}t}$ = constant) until point A in Fig. 118 is reached. At that instant, the increase of current in the collector circuit suddenly becomes considerably smaller, because after point A the I_c - V_{ce} characteristic becomes practically horizontal for a constant value of I_b. This means that the voltage which is induced in the secondary of the transformer suddenly changes polarity from $-V_L$ to $+ V_L$. As a result, the voltage between base and emitter changes from $E_{be} = (-V_{be} + V_C - V_L)$ to $E_{be} = (-V_{be} + V_C + V_L)$, so that the transistor is cut off at once. It should be noted that the current I_b, which has been flowing in the input circuit, has charged capacitor C, so that V_C has also increased in value.

Voltage V_L disappears very rapidly, because the energy stored in transformer T is dissipated in the tuned circuit formed by the inductance of the winding and the stray capacitance between the turns. When V_L has disappeared, we have the original situation once more, and the process which we have just described commences again.

CHAPTER IX

EXAMPLES OF TRANSISTOR CIRCUITS

In this chapter, we shall discuss a number of practical transistor circuits. The circuits selected have been fully developed, so that the amateur experimenter can build them without very much difficulty.

The circuits described are:

1) A signal tracer.
2) A telephone amplifier.
3) An internal telephone.
4) A hearing aid.
5) An amplifier for children's gramophones.
6) A 200 mW gramophone amplifier.
7) A 2.5 W amplifier.
8) Temperature control for an oil bath
9) A simple pocket-radio
10) A portable battery receiver
11) A d.c. converter
12) A control relay using a photo-sensitive transistor
13) A tachometer.
14) A supply unit for 6 to 16 V, 0.7 A
15) A sensitive d.c. voltmeter

1) A signal tracer

This signal tracer is designed to indicate whether or not r.f. and a.f. signals are present in radio receivers and similar circuits. Consequently, it is a useful instrument for quickly localizing faults.

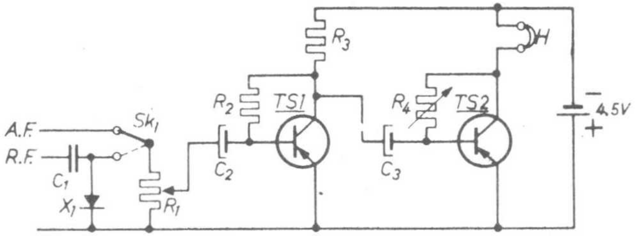

Fig. 119

TS_1	OC70	R_1	100 kΩ	C_1	0.01 μF
TS_2	OC71	R_2	220 kΩ	C_2	10 μF
X_1	OA73	R_3	4.7 kΩ	C_3	10 μF
H	headphones (2000 Ω)	R_4	100 kΩ		

The signal tracer consists of a two-stage a.f. amplifier. In use, a.f. signals are fed directly to the amplifier, and r.f. signals are first detected by the germanium diode X_1 (select by switch SK_1). The indicator consists of headphones having a resistance of 2000 Ω. These are included in the collector circuit of TS_2. (A small loudspeaker could be used instead.) The collector current of TS_2 is adjusted to 1 mA by means of the variable resistor R_4.

2) A telephone amplifier

Fig. 120 is the circuit diagram of a simple telephone amplifier which enables a second person to listen to a telephone conversation. For this purpose, the coil L_1 is placed in the stray field of the line transformer, by clipping it on to the telephone, as close as possible to the earpiece. An alternating voltage is induced in the coil, and is amplified and fed to the extra headphones.

TS_1 : OC70
TS_2 : OC71
R_1 : 220 kΩ
R_2 : 50 kΩ
T_1 : transformer:
primary 6.8 H.
secondary 0.333 H.

C_1 : 10 μF
C_2 : 10 μF
L_1 : 0.144 H
H : headphones (2000 Ω)

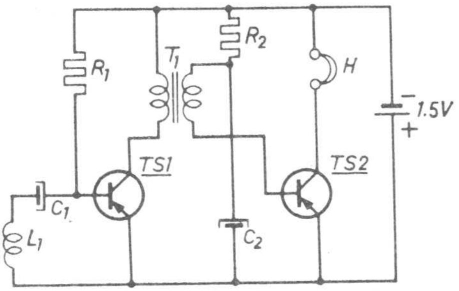

Fig. 120

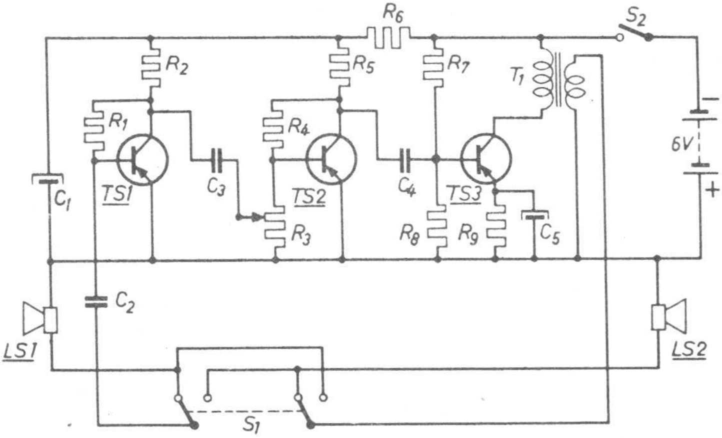

Fig. 121

R_1 : 120 kΩ
R_2 : 1.8 kΩ
R_3 : 50 kΩ (lin. or log.)
R_4 : 120 kΩ
R_5 : 1.8 kΩ
R_6 : 120 Ω
R_7 : 3.9 kΩ
R_8 : 1.8 kΩ
R_9 : 150 Ω
C_1 : 80 μF (6 V)
C_2 : 0.5 μF

C_3 : 0.5 μF.
C_4 : 0.5 μF
C_5 : 32 μF (3 V)
S_1 : two-pole switch
S_2 : single-pole switch
LS_1 : loudspeaker (5 Ω)
LS_2 : loudspeaker (5 Ω)
T_1 : output transformer 918/08
TS_1 : OC71
TS_2 : OC71
TS_3 : OC71

3) An internal telephone

This circuit, Fig. 121, makes use of the fact that a loudspeaker can also be used as a microphone. Possible uses of this installation are:

a) "Baby sitter".

If one loudspeaker is placed in the nursery, and the other in the sitting room, the parents can hear the slightest sound made by the baby.

b) An inter-comm. system between different rooms.

In the circuit diagram, loudspeaker LS_1 is shown operating as a microphone, and loudspeaker LS_2 as an actual loudspeaker. The functions of the two loudspeaker can be reversed by means of switch S_1. The actual amplifier consists of three transistors in the grounded-emitter configuration, coupled by means of *RC* filters. This type of amplifier has already been discussed in detail in Chapter V.

4) A hearing-aid with 4 transistors

Fig. 122 shows the circuit diagram of a hearing-aid with 4 transistors, which is fed by a battery of nominal voltage 2.4 volts.

The electromagnetic microphone ($Z = 1$ kΩ at 1000 c/s) which supplies the input signal, is connected directly between the base and the emitter of the first transistor. This means that resistor R_4, in the emitter circuit of this transistor, does not have to be decoupled.

The values of R_2 and R_3 are chosen to give the first amplifier stage an input impedance of about 1000 Ω, so that the microphone is exactly matched. Volume control is provided by feeding the output voltage of the first amplifier stage to the input of the second stage via the potentiometer R_6. In the first three amplifier stages, the working point is adjusted and stabilized by means of voltage-dividers and emitter resistors, as already described in detail in Chapter V. An earphone ($Z = 1000$ Ω at 1000 c/s) is included in the collector circuit of the last amplifier stage, so that the collector current must be 2 mA. This current is adjusted by means of the

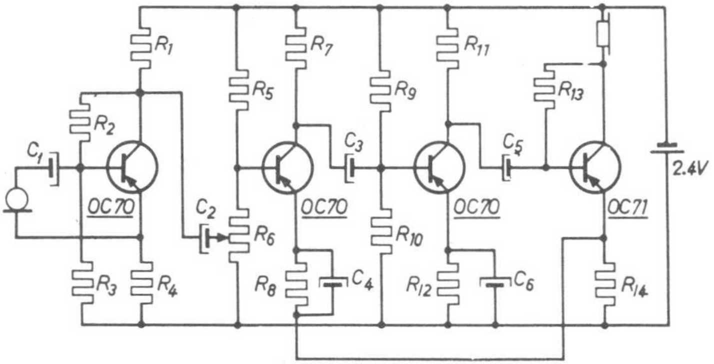

Fig. 122

R_1	2.7 kΩ	R_8	1 kΩ	C_1	8 μF (6 V)
R_2	56 kΩ	R_9	22 kΩ	C_2	8 μF (6 V)
R_3	33 kΩ	R_{10}	10 kΩ	C_3	8 μF (6 V)
R_4	1 kΩ	R_{11}	1.8 kΩ	C_4	8 μF (6 V)
R_5	18 kΩ	R_{12}	1 kΩ	C_5	8 μF (6 V)
R_6	5 kΩ (log)	R_{13}	39 kΩ	C_6	8 μF (6 V)
R_7	3.9 kΩ	R_{14}	2 Ω		

resistor R_{13}, connected between base and collector. The resistance of this resistor is α' times the resistance of the load (earphone), and usually equals 39 kΩ, which means that a relatively low value of α' is employed. In the first and last stages, negative feedback is obtained by means of the resistors R_2 and R_{13}, which are connected between base and collector of the respective transistors. In addition to this feedback, a voltage which is proportional to the current in the output circuit (the voltage across R_{14}) is fed back over three amplifying stages, in order to compensate for the spread in amplification at different temperatures.

5) An amplifier for children's gramophones

This 60 mW amplifier is designed for connection to a children's gramophone, on which special records are played at 78 r.p.m.

The circuit is show in Fig. 123. A high-resistance loudspeaker is included in the collector circuit and this also gives sufficient temperature stability.

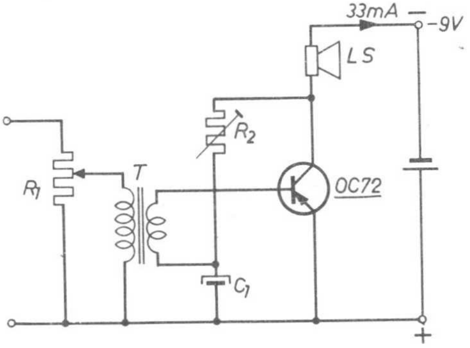

R_1 : 2 MΩ (log.)
R_2 : 100 kΩ (pot.)
C_1 : 100 μF (3 V)
T : $L_{prim.} = 500$ H.
Winding ratio $\frac{W_p}{W_s} = 45$
LS : loudspeaker $Z = 140\ \Omega$

Fig. 123

The collector current at 25° C is 33 mA and is adjusted by means of the variable resistor R_2. The transformer T serves to match the high output resistance of the pick-up to the relatively low input resistance of the transistor.

6) A 200 mW gramophone amplifier for use with a 6V battery

This gramophone amplifier is designed for connection to a crystal pick-up. An input voltage of about 0.3 V is sufficient to drive the amplifier to its full extent ($W_o = 200$ mW).

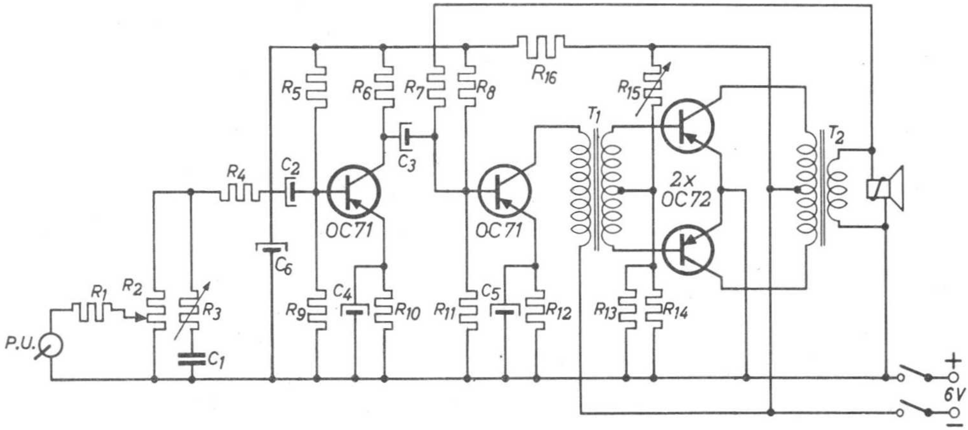

Fig. 124

R_1 : 330 kΩ
R_2 : 500 kΩ (var.)
R_3 : 100 kΩ (var.)
R_4 : 15 kΩ
R_5 : 82 kΩ
R_6 : 5.6 kΩ
R_7 : 100 kΩ
R_8 : 39 kΩ
R_9 : 15 kΩ

R_{10} : 1.8 kΩ
R_{11} : 18 kΩ
R_{12} : 470 Ω
R_{13} : *NTC* resistor 130 Ω at 25° C
R_{14} : 82 Ω
R_{15} : 3 kΩ (var.)
R_{16} : 150 Ω

C_1 : 0.012 μF (ceramic)
C_2 : 10 μF (3 V)
C_3 : 32 μF (3 V)
C_4 : 32 μF (3 V)
C_5 : 100 μF (3 V)
C_6 : 100 μF (12.5 V)

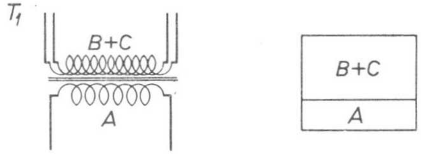

Fig. 124a

Transformer T_1:
Dimensions of core: 31 × 25 × 8 mm.
Material: NiFe 36.
(36 % Ni; 2 % Cu; 0.8 % Mn; rest Fe).

Winding *A*　enamelled copper wire 0.09 mm; 2100 turns (d.c. resistance 300 Ω).

Winding *B* + *C* enamelled copper wire 0.18 mm; 600 turns (bifilar) (d.c. resistance 28 + 28 Ω).

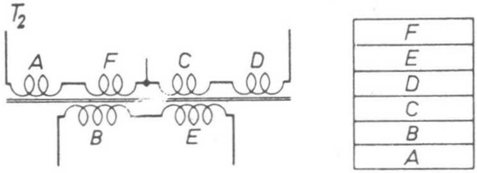

Fig. 124b

Transformer T_2:
Dimensions of core: 40 × 32 × 10.5 mm.
Material: SiFe 2.6.
(0.8—1.8 % Si; rest Fe).

Winding *A*	enamelled copper wire 0.28 mm;	204 turns
Winding *B*	enamelled copper wire 0.50 mm;	62 turns
Winding *C*	enamelled copper wire 0.28 mm;	204 turns
Winding *D*	enamelled copper wire 0.28 mm;	204 turns
Winding *E*	enamelled copper wire 0.50 mm;	62 turns
Winding *F*	enamelled copper wire 0.28 mm;	204 turns

(d.c. resistance $A + F = C + D = 8.7\ \Omega$).
(d.c. resistance $B + E = 0.83\ \Omega$).

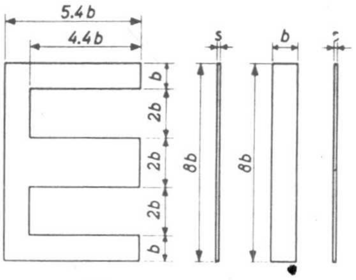

Fig. 124c

Transformer T_1:
b = 3.9 mm.
s = 0.35 mm.

Transformer T_2:
b = 5 mm.
s = 0.5 mm.

Description of the circuit

The amplifier consists of three stages: a pre-amplifier, a driver stage and a push-pull output. The crystal pick-up is "matched" to the input circuit of the pre-amplifier by including the resistor R_1 in this circuit. Although this solution means that part of the output voltage of the pick-up is lost, it is cheaper than a matching transformer, which would require a very high primary self-inductance. The volume control R_2 is also included in the input circuit in order to prevent the subsequent amplifier stages from being overloaded. The tone control takes the form of an *RC* filter (R_3-C_1).

The pre-amplifier and the driver stage are coupled by means of an *RC* filter. This means that the amount of energy transferred is not the maximum possible, but on the other hand, this type of coupling has a favourable effect on the frequency characteristic of the amplifier.

The driver stage is coupled to the output stage by transformer T_1 (transformation ratio 3.5 : 1 + 1). The variable resistor R_{15} enables the push-pull output stage to be adjusted to operate under class B conditions. The fact that the amplifier is supplied from batteries makes this an important consideration. The matching transformer T_2 makes it possible to connect a 5 Ω loudspeaker to the amplifier.

Negative feedback is employed in order to reduce both the linear and non-linear distortion. As this is caused mainly by the driver stage and the output stage, the feedback is only applied to these two stages. Voltage feedback is obtained by connecting resistor R_7 between the secondary of the output transformer, and the base of the driver transistor. This not only reduces the distortion of the amplifier itself, but also compensates the non-linear impedance of the loudspeaker.

Finally, Fig. 125 shows the frequency characteristic of the amplifier. Curve I refers to the "maximum treble" position of the tone control, and curve II is for the minimum position of this control.

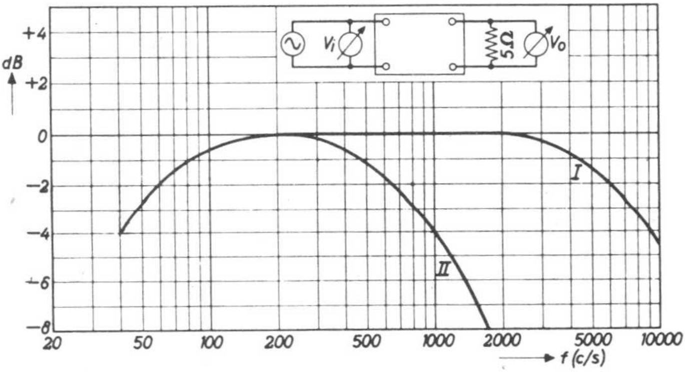

Fig. 125

7) A 2.5 Watt amplifier

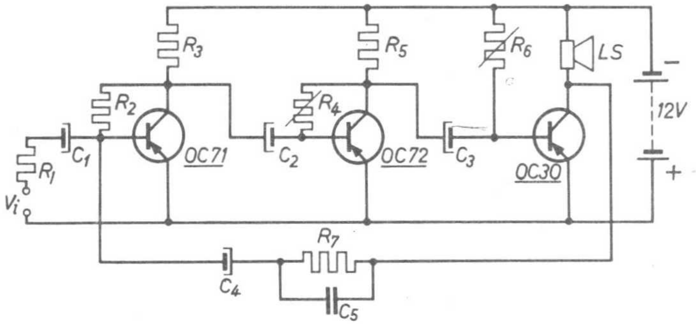

Fig. 126

R_1	10 kΩ	R_7	see text	C_5	see text
R_2	56 kΩ	LS	loudspeaker ($Z = 7\ \Omega$)	TS_1	OC71
R_3	1 kΩ	C_1	10 μF (3 V)	TS_2	OC72
R_4	2 kΩ (var.)	C_2	25 μF (6 V)	TS_3	OC30
R_5	120 Ω	C_3	80 μF (6 V)		
R_6	1 kΩ (var.)	C_4	5 μF (12 V)		

The amplifier consists of three stages. There is a pre-amplifier with an OC71, a driver stage with an OC72 and an output stage with an OC30. The various stages are coupled together by means of an *RC* network. The first and second stages are stabilized by connecting the resistors R_2 and R_4 between the base and collector of the respective transistors, and this also gives a slight negative feedback. The collector current of the driver stage is adjusted by means of the variable resistor R_4 so that the collector voltage equals 1.2 volts. The operating conditions of the output transistor are also adjusted by means of a resistor between base and collector (R_6), so that the collector voltage is 6.25 volts. If required, a frequency-dependent negative voltage feedback can be added (R_7-C_5), depending on the frequency characteristic which the amplifier is required to have. The frequency characteristics are plotted in Fig. 127. Curve *A* represents the frequency characteristic when no feedback is applied, and curves *B* and *C* represent the characteristic when feedback is applied.

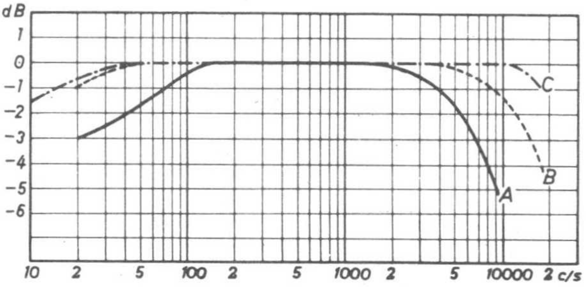

Fig. 127

For curve B, the values of R_7 and C_5 are 0.22 MΩ and 30 pF respectively, and for curve C these values are 82 kΩ and 100 pF.

8) Temperature control for an oil bath

The temperature of the oil is controlled by means of an N.T.C. resistor placed in the bath. The latter also contains the heating elements R_{12} and R_{13} as well as the OC 36 power output transistor. This arrangement has the dual advantage that the transistor is effectively cooled, whilst the heat dissipated by it is also utilised for heating the bath.

Bath temperatures together with the associated values of R_3, R_4 and the N.T.C. resistor are given in the following table.

T	R_3	R_4 (variable)	N.T.C. resistor
25 °C	2.7 kΩ	5 kΩ	5 kΩ
35 °C	47 kΩ	50 kΩ	100 kΩ
45 °C	33 kΩ	50 kΩ	100 kΩ
55 °C	33 kΩ	50 kΩ	100 kΩ
65 °C	33 kΩ	35 kΩ	100 kΩ
75 °C	4.7 kΩ	20 kΩ	100 kΩ

For 25 °C stabilisation, provision for cooling the bath must be included; at high temperatures the transistor must be cooled.

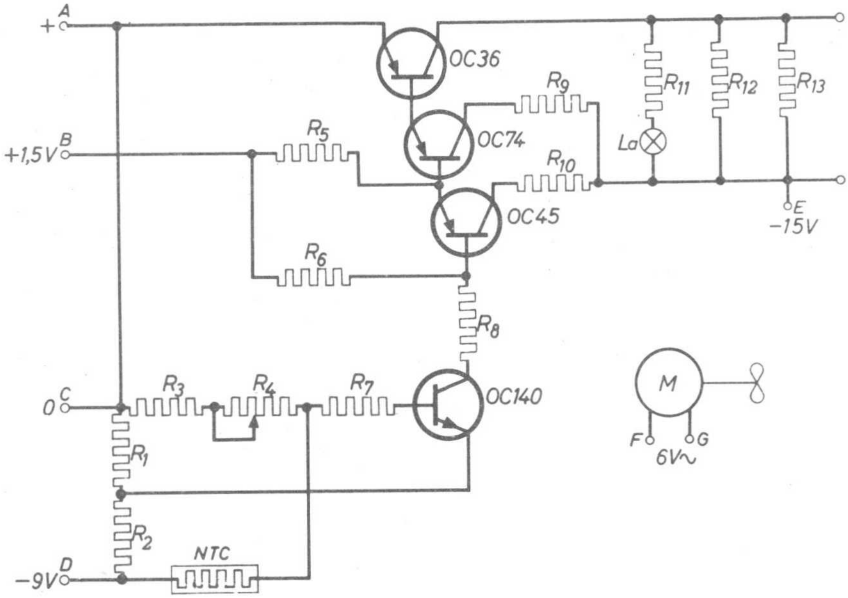

Fig. 128

R_1 : 220 Ω		R_9 : 220 Ω		
R_2 : 220 Ω		R_{10} : 8200 Ω		
R_5 : 10 kΩ		R_{11} : 120 Ω		
R_6 : 68 kΩ		R_{12} : 12 Ω		(5.5 W)
R_7 : 3300 Ω		R_{13} : 12 Ω		(5.5 W)
R_8 : 4700 Ω				

9) A simple pocket-radio

This circuit is shown in Fig. 129, and the design has been kept very simple, so that no further description is necessary.

The coil L_1-L_2 is wound on a ferrite rod, the number of turns depending on the dimensions of the rod. The tapping for diode X_1 is made about one tenth of the way along the coil.

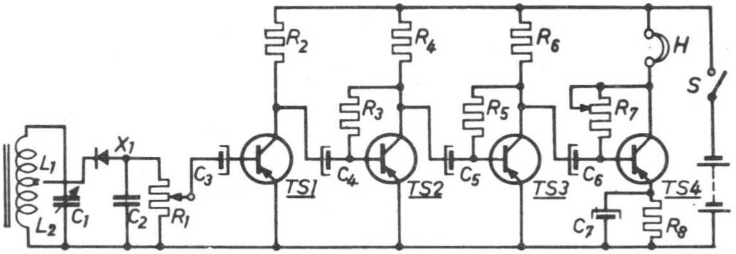

Fig. 129

R_1	:	47 kΩ	C_1	:	100 pF (var.)	X_1	:	OA79
R_2	:	5.6 kΩ	C_2	:	820 pF	TS_1	:	OC71
R_3	:	220 kΩ	C_3	:	5 μF	TS_2	:	OC71
R_4	:	3.9 kΩ	C_4	:	5 μF	TS_3	:	OC71
R_5	:	120 kΩ	C_5	:	5 μF	TS_4	:	OC71
R_6	:	2.2 kΩ	C_6	:	5 μF	H	:	headphone (2000 Ω)
R_7	:	100 kΩ (var.)	C_7	:	8 μF			
R_8	:	470 Ω						

10) Transistorized receiver for the medium and long wave-bands

Fig. 130 shows the circuit diagram of a transistorized receiver for the medium and long wave-bands. A 6-V battery supplies the power for this set.

The receiver consists of a self-oscillating mixer stage, a two-stage L.F.amplifier, a two-stage A.F.amplifier and a balanced output operating in class B.

The switches SK_1 and SK_2 - SK_3 are wave-band selectors; SK_5 is for the tone control, and SK_4 is the ON-OFF switch.

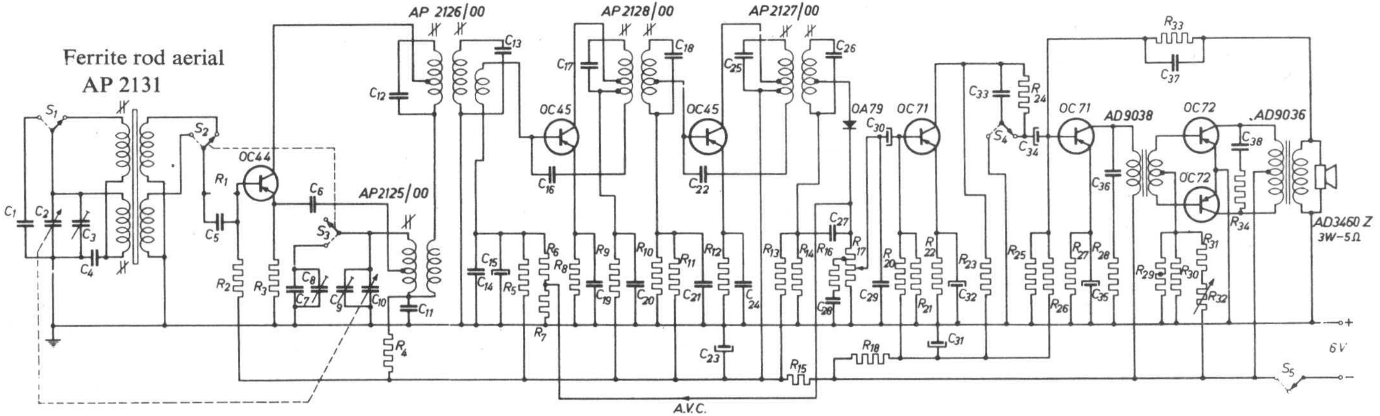

Fig. 130

R_1 = 2.2 kΩ
R_2 = 8.2 kΩ
R_3 = 2.2 kΩ
R_4 = 1 kΩ
R_5 = 120 kΩ
R_6 = 10 kΩ
R_7 = 22 kΩ
R_8 = 680 Ω
R_9 = 1 kΩ
R_{10} = 3.3 kΩ
R_{11} = 22 kΩ
R_{12} = 560 Ω
R_{13} = 10 kΩ
R_{14} = 390 Ω
R_{15} = 220 Ω
R_{16} = 1.5 kΩ
R_{17} = 4+16 kΩ; log.

R_{18} = 1 kΩ
R_{19} = 2.2 kΩ
R_{20} = 82 kΩ
R_{21} = 15 kΩ
R_{22} = 1.8 kΩ
R_{23} = 6.8 kΩ
R_{24} = 4.7 kΩ
R_{25} = 27 kΩ
R_{26} = 22 kΩ
R_{27} = 680 Ω
R_{28} = 560 Ω
R_{29} = 130 Ω, NTC
R_{30} = 82 Ω
R_{31} = 1 kΩ
R_{32} = 2 kΩ; lin.
R_{33} = 33 kΩ
R_{34} = 330 Ω

C_1 = 143 pF/125 V; polyst.
C_2–C_{10} = tuning capacitor
C_3 = 60 pF; trimmer
C_4 = 3 kpF/125 V; polyst.
C_5 = 47 kpF/125 V; polyester
C_6 = 10 kpF; ceramic
C_7 = 290 pF/125 V; polyst.
C_8 = 60 pF; trimmer
C_9 = 60 pF; trimmer
C_{11} = 0.1 μF/125 V; polyester
C_{12} = 200 pF; ceramic
C_{13} = 200 pF; ceramic
C_{14} = 0.1 μF/125 V; polyester
C_{15} = 32 μF/40 V; electr.
C_{16} = 51 pF; ceramic
C_{17} = 200 pF; ceramic
C_{18} = 200 pF; ceramic
C_{19} = 0.1 μF/125 V; polyester
C_{20} = 0.1 μF/125 V; polyester

C_{21} = 0.1 μF/125 V; polyester
C_{22} = 51 pF; ceramic
C_{23} = 100 μF/16 V; electr.
C_{24} = 0.1 μF/125 V; polyester
C_{25} = 200 pF; ceramic
C_{26} = 200 pF; ceramic
C_{27} = 2.2 kpF; ceramic
C_{28} = 0.1 μF/125 V; polyester
C_{29} = 22 kpF/125 V; polyester
C_{30} = 3.2 μF/6.4 V; electr.
C_{31} = 64 μF/10 V; electr.
C_{32} = 100 μF/4 V; electr.
C_{33} = 47 kpF/125 V; polyester
C_{34} = 3.2 μF/6.4 V; electr.
C_{35} = 100 μF/4 V; electr.
C_{36} = 1.5 kpF/125 V; polyester
C_{37} = 330 pF; ceramic
C_{38} = 0.1 μF/125 V; polyester

11) A d.c. converter

Fig. 131 shows the circuit diagram of a d.c. converter. A converter of this type is frequently used in receivers in which the radio-frequency and intermediate-frequency amplification is provided by thermionic valves, and the audio-frequency amplification by transistors. By converting the battery voltage of 6 volts to a direct voltage of 45 volts, the converter provides the supply voltage required for the anodes and the screen grids of the thermionic valves.

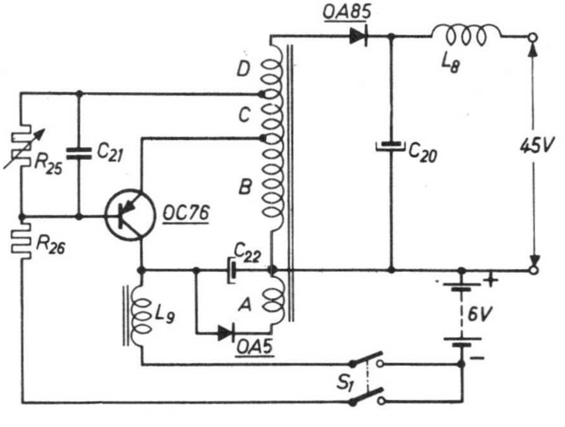

Fig. 131

When the switch S_1 is closed, a direct current will start to flow through the loop consisting of battery-transformer winding B-transistor-choke L_9-battery. The I_c-V_{ce} characteristic of the transistor (see Fig. 132) shows that it has a small internal resistance for values of V_{ce} below the knee voltage. This means that after switch S_1 has been closed, there is a constant voltage across winding B, and that the direct current flowing through the above loop will thus show a linear increase in value with time. A voltage is also produced across winding *C*, of polarity such that the base of the transistor is negative in relation to the emitter (this is a question of winding). As there is a constant voltage between base and emitter of the transistor, the base current I_b will also remain constant.

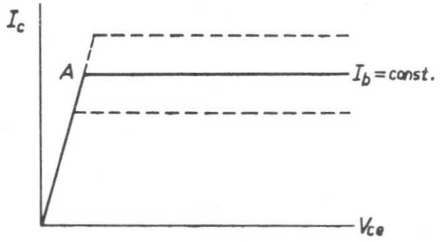

Fig. 132

The current I_c thus increases in direct proportion to the time, until point *A* (fig. 132) is reached. At this instant, the rate of increase of the current becomes considerably smaller so that the voltage across winding *B* also drops. In its turn, a reduction in this voltage results in a further decrease in the current. If the current decreases, however, this means that the voltage across winding *B* suddenly changes polarity. (Remember the relationship $E_B = -L\frac{d_i}{d_t}$). The voltage across winding *C* is also suddenly reversed, with the result that the transistor becomes blocked. The energy which has been stored in winding *B* ($\frac{1}{2}L_BI^2$) while the transistor was taking current will now be expended in oscillations in the tuned circuit which is formed by the self-inductance of *B* and its parasitic capacitance, so that an alternating voltage is produced across this winding.

This voltage is transformed up, and then rectified by means of the germanium diode OA85, after which it charges capacitor C_{20}. The energy stored in winding *B* while the transistor was drawing current is thus transferred to capacitor C_{20}. After this has taken place, the process which has been described above starts all over again.

The function of diode OA5 which, in series with winding *A*, is connected in parallel with the battery, is to stabilize the output voltage of the converter, and also to ensure that the voltage across the transistor does not become too high. If the voltage across winding *A* of the autotransformer becomes greater than the battery voltage, the diode will start to pass a current, so that the voltage across this winding, and consequently across the windings $B + C + D$ cannot increase any further.

To start the circuit operating, the base has a small bias voltage which is obtained from the voltage divider R_{26}-R_{25}.

12) A control relay using a photo-sensitive transistor

The collector current of a transistor bears a fast linear relationship to the amount of light falling upon it and use is made of this characteristic in photo-sensitive transistors. The two circuits illustrated represent simple applications of the photo-sensitive transistor OCP 70 which, in conjunction with a Schmitt trigger circuit, operates a relay

Let us first consider the circuit shown in Fig. 133a. In the state of rest, i.e. with no light falling upon the transistor TS_1, transistor TS_2 passes current and TS_3 is blocked. When TS_1 is illuminated, the collector potential rises, the current in TS_2 drops and TS_3 is no longer blocked.

When a certain threshold potential on the base of TS_2 is reached, the feedback across the common emitter resistor R_4 ensures a circuit with a very steep characteristic. TS_2 is then cut off, TS_3 passes current and the relay is pulled up. The reverse process, that is the return to the state of rest, also takes place instantaneously, as the illumination on the photo-sensitive transistor decreases below a certain level.

The OA81 diode is employed to protect the transistor TS_3 against high inductive voltage surges when the relay drops off. The relay operates

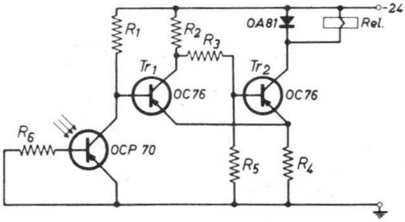

Fig. 133a

on a current of 34 mA and the circuit is fully reliable up to an ambient temperature of 50 °C.

In the somewhat modified arrangement shown in Fig. 133b the relay is operated when the illumination on TS_1 is cut off. When light falls on this transistor, then TS_2 passes current, TS_3 becomes non-conductive and the relay remains at rest.

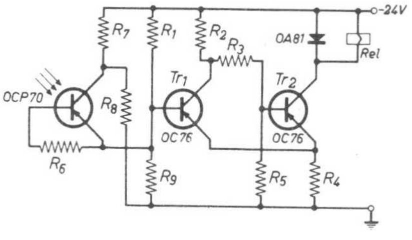

Fig. 133b

13) A revolution counter for petrol engines

This electric revolution counter for petrol engines is based on the fact that pulse-shaped voltages are produced in the primary winding of the ignition coil every time a spark is made. These pulses are used to

R_1	:	47	kΩ
R_2	:	270	Ω
R_3	:	390	Ω
C_1	:	0.05	μF
C_2	:	0.37	μF

Fig. 134

drive the counting circuit. Revolution counters for other industrial machines can also be constructed on the same principle, by attaching a circuit breaker to the rotating part whose speed of rotation is to be determined. In this case, a self-inductance must be included in the current circuit.

The circuit breaker and coil are shown to the left of the dotted line and to the right of this line is the circuit of the revolution counter itself. The voltage across the primary of the coil (voltage between points *A* and *B*) is conveyed to the input of the revolution counter, and produces a square voltage (*b*) in the collector circuit of the first transistor (Fig. 135).

Fig. 135

After it has been differentiated by the *RC* filter which provides the coupling between the two transistors, this pulse is fed to the base of the second transistor. (The form of the pulse is shown at (*c*)). This second transistor operates as a switch which only reacts to the negative pulses. During the positive pulses, the base is positive with respect to the emitter, and so the transistor is blocked. If the time constant is low enough, the mA meter in the emitter circuit of the second transistor will give a reading which is proportional to the frequency, and thus to the number of revolutions per minute.

The relationship between the reading of the mA meter and the number of revolutions per minute is as indicated in Fig. 136. This curve must be determined experimentally for every revolution counter.

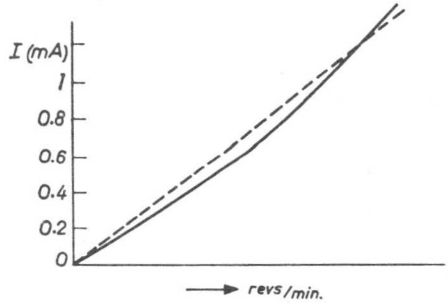

Fig. 136

14) A supply unit for 6 to 16 V, 0.7 A

In this simple stabiliser a part of the output voltage is compared with the voltage across the zener diode OAZ 203, the voltage difference then being applied to the transistor TS_1. This transistor TS_1 drives a cascade control circuit consisting of the transistors TS_2 and TS_3. The output voltage is adjustable roughly and finely by means of the resistors R_1 and R_2 respectively. The capacitors C_1 and C_3 are provided for reducing the hum voltage; C_2 counteracts any tendency towards oscillations.

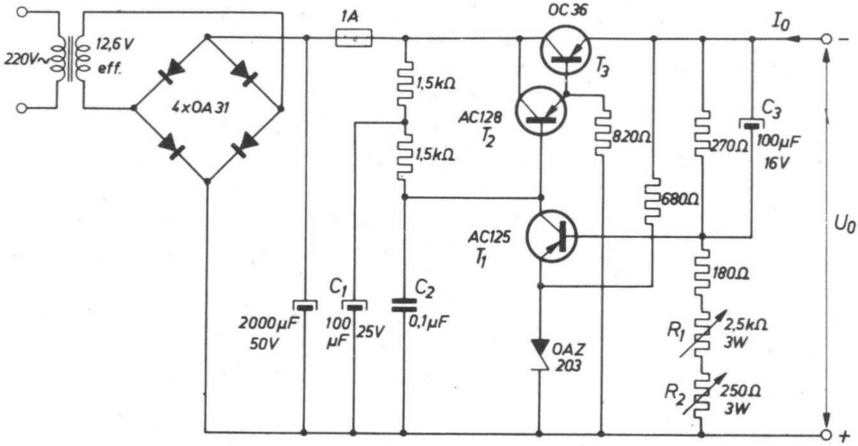

Fig. 137

Technical data

Output voltage (variable)	6.5 to 15.7 V
Max. load current	0.7 A
Variation in output voltage	$\leqq$ 0.1 V on mains fluctuations of about plus or minus 10 %
Ripple voltage at output (up to max. load current)	$\leqq$ 0.5 mV
Internal resistance	0.1 Ω approx.

15) A sensitive d.c. voltmeter

Two stages of amplifications are required to drive the 100 μA moving-coil instrument. The input stage, consisting of transistors TS_1 and TS_2, is built into a copper block in order to ensure that the output voltage will be as independent as possible of the temperature. The collector current per transistor has accordingly been kept as low as possible (50 μA).

Better linearity of the voltage amplification is achieved by circuiting the transistors TS_3 and TS_4 with common collector.

The meter is adjusted in the following manner. As the voltage gain of a transistor is dependent on its setting, the first step is to adjust the supply voltage to —7.2 V by means of R_6. Position 1 of the switches corresponds to full scale deflection.

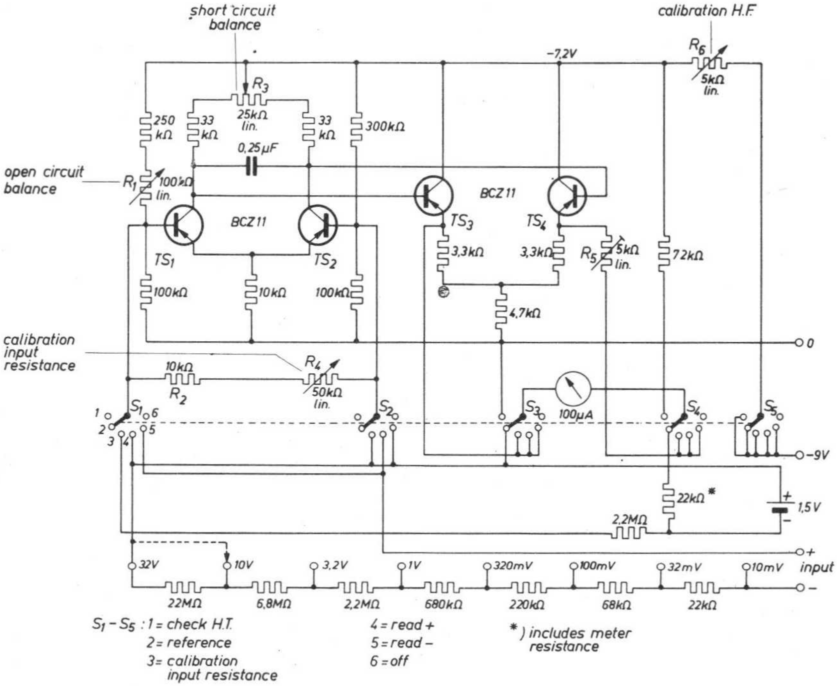

Fig. 138

The voltage divider at the input of the instrument is set to the 10 mV range and the instrument is zeroed with shorted and open input with the aid of R_3 and R_1 respectively (S set to position 4 or 5). The voltage amplification is adjusted direct to the appropriate value with R_5, after which the instrument will give full deflection when an input voltage of exactly 10 mV is applied to it (resistance of the external voltage source $< 100\ \Omega$).

Finally the input resistance of the input stage is adjusted to provide the correct ratio of the voltage divider; to do this adjust R_4 so that, with the switch set to position 2, the instrument, when connected to a 1.5 V battery, gives the same reading as at setting 3 of the switch. Resistors $R_2 + R_4$ in parallel with the bases of the input transistors ($TS1$ and $TS2$) correct any variations in the input resistance due to the dependence on temperature of the transistor current amplifier; for an increase of 20 °C in the temperature of the instrument the zero error is less than 5 % of the full deflection; the loss in sensitivity or calibration error is max. 1 %.

Technical data

Battery voltage	9 V
Sensitivity (full deflection)	10 mV
Input resistance	1 MΩ/V
Relative error from 20 to 40 °C	$\leqq$ 1 %
Current consumption	0.7 mA

APPENDIX

Although but a few years ago it was possible to make transistors only for A.F. purposes and, to a limited extent, also R.F. types, capable of handling comparatively little power, the present situation is rather different, due in part to entirely new methods of manufacture. At the same time a number of new electronic devices have been placed on the market, based largely on the use of germanium and silicon semiconductor material. The following will serve as few typical examples.

Hall generators

These consist of a thin rectangular plate of semiconductor material placed in a magnetic field in such a manner that the lines of force pass through the large faces. When a voltage is applied to opposite sides of the plate a potential difference occurs across the other two sides which is proportional both to the magnetic field strength and to the applied voltage. These generators are used as a means of measuring magnetic fields.

Thyristors

Thyristors are 4-layer (*PNPN*) transistors having two stable states, namely one with a very low resistance (conductive state) and one with a high resistance (non-conductive state). The same characteristic is found in thyratrons.

Tunnel diodes

These are made from semiconductor material containing more impurities than usual. The current/voltage characteristic rises very steeply in the conductive zone to a maximum, after which it drops rapidly again to a minimum and then further assumes the ordinary characteristic of a diode. Tunnel diodes are employed in oscillators and amplifiers.

Photoconductive resistors

These are resistors the conductivity of which increases when the semiconductor material of which they are mare (CdS of PbS) is exposed to light.

Applications: relays, protective devices.

Zener diodes

In this type of diode the current rises sharply when the voltage exceeds a certain critical limit. Zener diodes can be used in certain cases where a reference voltage is required.

METHODS OF MANUFACTURE

Alloying

The transistors described in this booklet are manufactured along the following lines. The starting material for *PNP* transistors is *N* germanium. For *NPN* transistors the material is of course of the *P* type, this being prepared in advance in the form of very thin, small, plates. The emitter and collector are formed by placing a small pellet of indium on each side of the plate (exactly opposite to each other), the whole being then heated until the indium melts.

The molten indium gradually penetrates the germanium; in other words an impurity in the form of indium is introduced into the *N* germanium at these points, the result being *P* germanium. Figure 139 shows a cross-section of a transistor made in this manner; it is called an alloy-junction transistor by reason of the germanium-indium alloy produced at the points

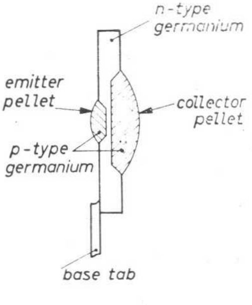

Fig. 139.

for the emitter and collector. The thickness of the layer of *N* material between the collector and emitter depends upon the temperature and duration of the heating process already mentioned; the higher the temperature and the longer the heating time, the more deeply the indium penetrates the germanium.

The amount of power that a transistor is capable of dissipating depends in the first instance on the temperature of the transistor itself, that is the amount of heat generated within a certain period of time and the heat given off by it in the same period. The maximum permissible temperature for germanium is 90 °C, which implies that the transistors of the type described here are never capable of amplifying an appreciable amount of power, since the heat is carried away through a coating of grease (see Chapters I and IV).

Transistors produced specifically for handling power, such as the OC26, are manufactured in the same way, but the whole assembly is on a larger scale and the transistor proper, with its collector, is mounted on a solid copper plate (Fig. 140). This latter feature ensures a more intensive dissipation of the heat generated. Transistors of this type have two terminations, the copper mounting plate functioning as collector connection.

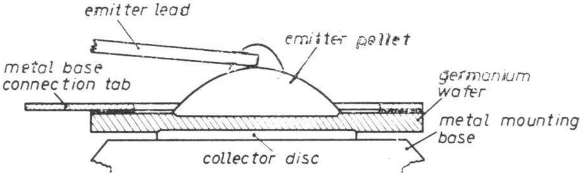

Fig. 140

The diffusion method

In this method of manufacture the starting material is a plate of *P* material. This is placed for a certain time in a mixture of gases containing a surplus of arsenic. This has the effect of forming a skin of *N* material on the *P* material, the thickness of this skin is determined by the temperature, the gas pressure and the duration of the diffusion process. The emitter and base are then attached to the skin of *N* material by alloying with *P*- and neutral materials respectively (Fig. 141).

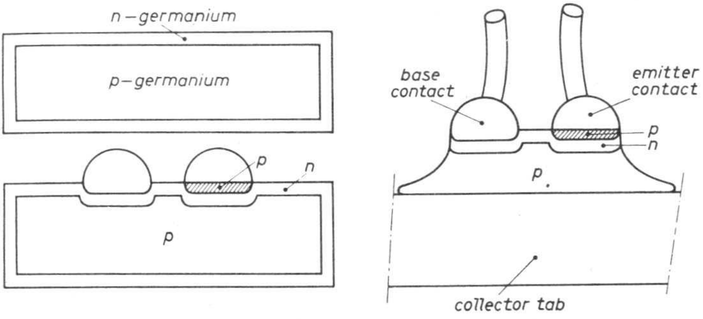

Fig. 141

The *N* layer on the plate of *P* material is then etched off, yielding a transistor of the type shown in Fig. 142. The OC171 is an example of

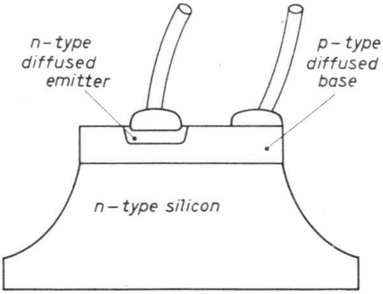

Fig. 142.

this type of transistor, which is called a mesa transistor after the Spanish word mesa meaning table; this relates only to the construction of the device.

It should be expressly pointed out here that variants of this technique are also employed; for example the emitter and base are often mounted by the diffusion method instead of in the manner described.