TUNG-SOL

PRODUCT BULLETIN

INDUSTRIAL ELECTRON TUBE TYPE 6336B

JUNE 1965

TWIN POWER TRIODE FOR SERIES REGULATOR SERVICE

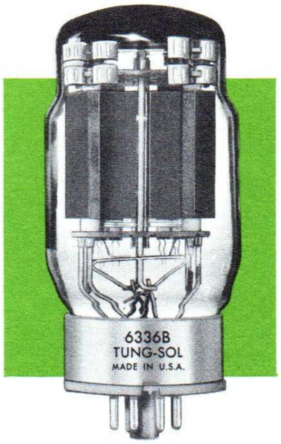

DESCRIPTION — The 6336B is a rugged, twin power triode particularly well suited for use as a pass tube in series regulated power supplies. Tubes of this design will meet the test requirements of MIL-E-1/1478.

The 6336B is capable of withstanding prolonged exposure to continuous vibration. This performance extra is achieved by using ceramic spacers, rather than mica, to hold the electrode in position. Also, gold plated strap frame grids are used for extra mechanical stiffness.

The 6336B will replace the 6336A in any application. Also, one 6336B will replace two or three 6080WB or 6AS7G tubes working in parallel.

ELECTRICAL DATA

Heater Voltage	6.3	±10%	Volts
Heater Current — $E_f = 6.3$ Volts	5.0		Amperes
Minimum Cathode Heating Time	30		Seconds
Transconductance-per Section	13,500		Umhos
Amplification Factor	2.7		
Interelectrode Capacities — per Section			
Grid to Cathode	16.7		pf
Grid to Plate	21.8		pf
Cathode to Plate	3.8		pf
Heater to Cathode	15.0		pf
Interelectrode Capacities — Between Sections			
Section 1 Plate to Section 2 Plate	0.6		pf

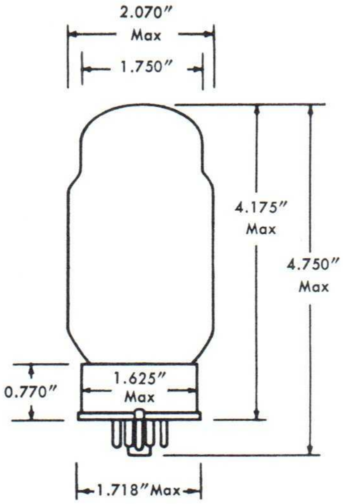

MECHANICAL DATA

Mounting Position (If tube is to be mounted in a horizontal position it is recommended that it be mounted so that the base lug key be either directly up or directly down)	Any
Bulb	T 16 Nonex
Base	Large wafer octal, glass bonded mica, with metal sleeve, JEDEC type B8-98
Average Net Weight	3.5 ounces

RATINGS, ABSOLUTE VALUES

	Minimum	Maximum	
Plate Dissipation per Plate	—	30	Watts
Plate Voltage	0	400	Volts dc
Plate Current per Plate — Note 1	—	400	Milliamperes dc
Heater-Cathode Voltage	−300	+300	Volts dc
Grid Voltage	−300	0	Volts dc
Envelope Temperature	—	250	Degrees Centigrade
Altitude for Full Ratings — Note 2	—	10,000	Feet
Grid Circuit Resistance Values — Note 3			
For Fixed Bias, or Cathode and Fixed Bias Operation	500	200,000	Ohms
For Cathode Bias Operation	500	500,000	Ohms

Note 1. If tube voltage drop is to be swung more than 6 volts, this current cannot be realized. See Plate Characteristics Curve.

Note 2. If cooling is provided to keep bulb temperature within ratings, altitude rating can be extended to 60,000 feet.

Note 3. When sections are paralleled, minimum cathode resistance per cathode shall be 27 ohms or that resistance necessary to produce 10 percent of the grid bias voltage, whichever is greater.

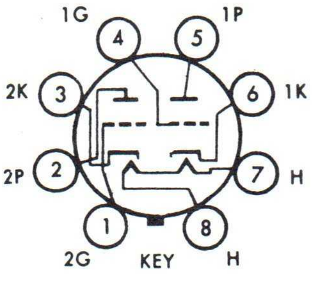

BASING DIAGRAM
BOTTOM VIEW
8BD

APPLICATION NOTES

The 6336B is widely used as a "passing" tube or series regulator tube in controlled power supplies because of its high transconductance at relatively low plate voltages. To provide the desired output current, many triode sections can be paralleled. If tube sections are to be paralleled however, the designer is strongly urged to use sufficient resistance in each cathode leg to equalize current division among the triode sections. Recommended values for various operating currents are shown on the plate characteristics curve. If the output current of the supply is not fixed, use the resistance indicated for the lowest current that approaches the maximum plate dissipation line. Cathode resistance is superior to anode resistance because it helps to provide increasing bias on the sections taking greater plate current. A cathode resistor too, need be only one quarter the value $\left(\frac{R}{u+1}\right)$ of a plate resistor, and therefore will dissipate only one quarter the power. In any case, the only losses incurred in using a resistor is the insertion loss of the resistor itself (about two watts) and the additional voltage (less than 10 volts) necessary from the unregulated supply. A cathode resistor adds a small additional loss by causing the passing tube to work with higher bias and hence with greater tube drop.

The regulator circuit shown in Figure 2 is preferable from the consideration of the safety of the passing tube both during warmup and in the event of trouble in the amplifier circuit or if the amplifier tube is removed from its socket. It has the additional advantage of providing a constant voltage for the amplifier circuit. However, if the regulated output voltage is low (below 250 volts), it will be necessary to provide additional negative voltage for the reference tube circuit. Also, if the regulated output voltage is to be variable, it may be necessary to follow Figure 1. If Figure 1 is used, a clamping diode rated at 300 volts piv should be employed to prevent the grid from swinging positive. The use of this diode is of extreme importance for without it, during warmup the amplifier tube draws little current, there is little IR drop across the resistor, and the grid of the passing tube is effectively tied to the plate. The grid then will attempt to draw excessive current from the passing tube's cathode and may seriously impair cathode life.

Passing tube operation conditions should be chosen to provide as low a tube drop as possible. A safety margin of at least 5 volts from the zero bias line should be allowed however, for variations of individual tubes. If the cathode resistors as suggested on the plate characteristic curve are used, a minimum bias of 7.5 volts will be provided. Sufficient bias excursion should be allowed for overcoming ripple. The amplifier circuit should be able to swing the passing tube grid far enough to counteract the effect of unbalance due to tube ageing.

A grid resistor should be used for each triode section. This should be high enough to prevent parasitic oscillation but not large enough to prevent loss of control due to a small amount of "gas" grid current. A value of grid resistance that meets both these conditions is 1,000 ohms. Heater voltage should be kept as close as possible to 6.3 volts as measured on the tube pins. When connecting many high drain tube heaters across a single transformer, bus bars feeding from "alternate ends" (Figure 3) should be used with a stranded pair feeding individual sockets.

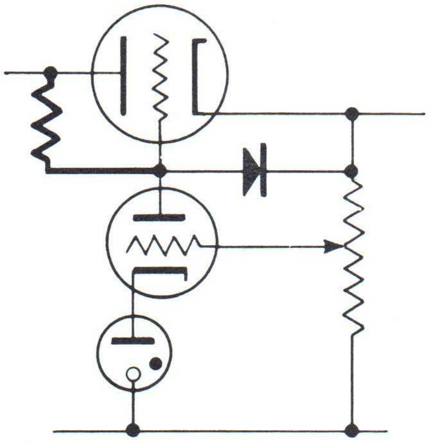

FIGURE 1

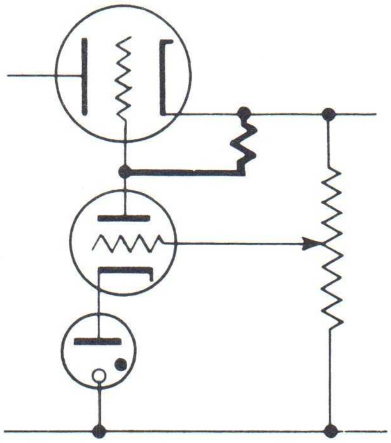

FIGURE 2

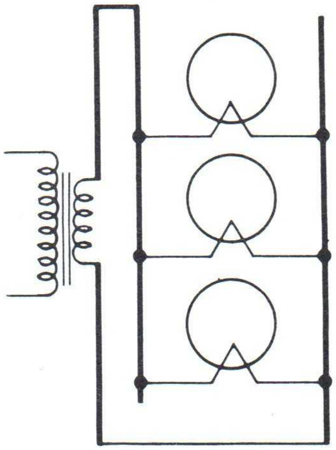

FIGURE 3

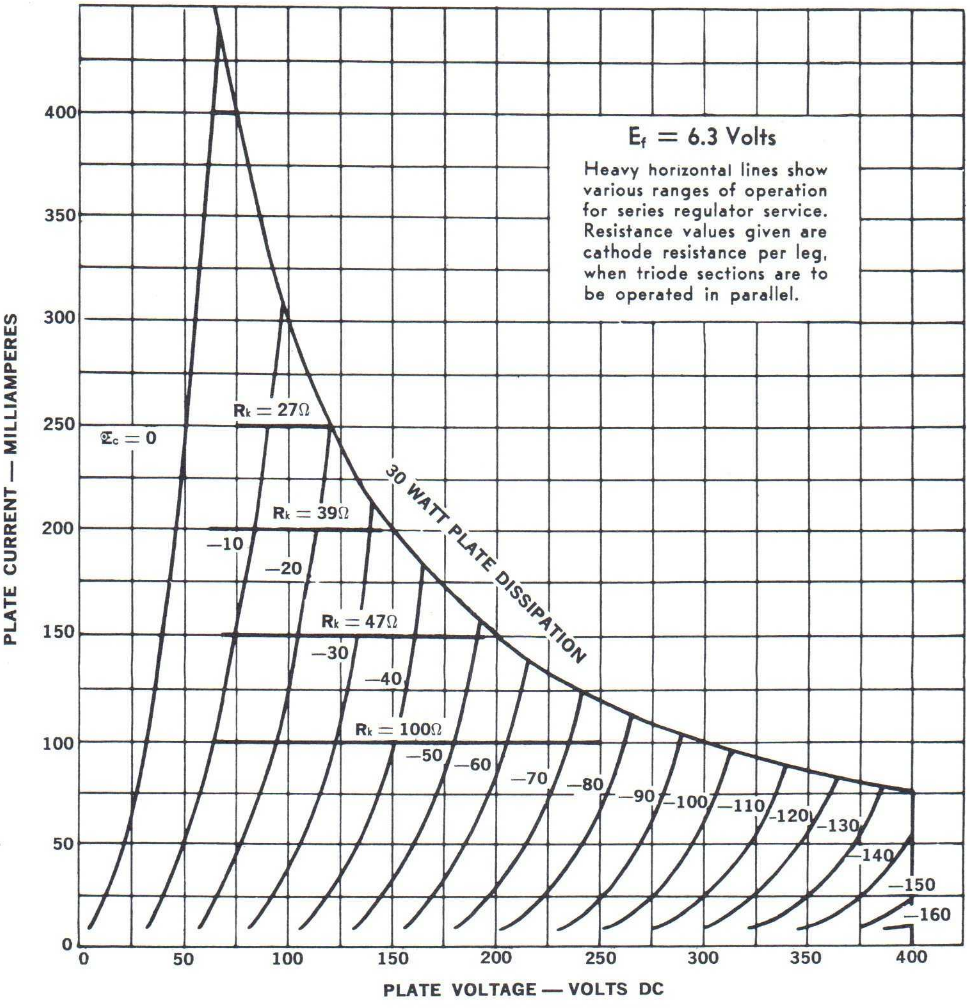

E_f = 6.3 Volts

Heavy horizontal lines show various ranges of operation for series regulator service. Resistance values given are cathode resistance per leg, when triode sections are to be operated in parallel.

PLATE CHARACTERISTICS

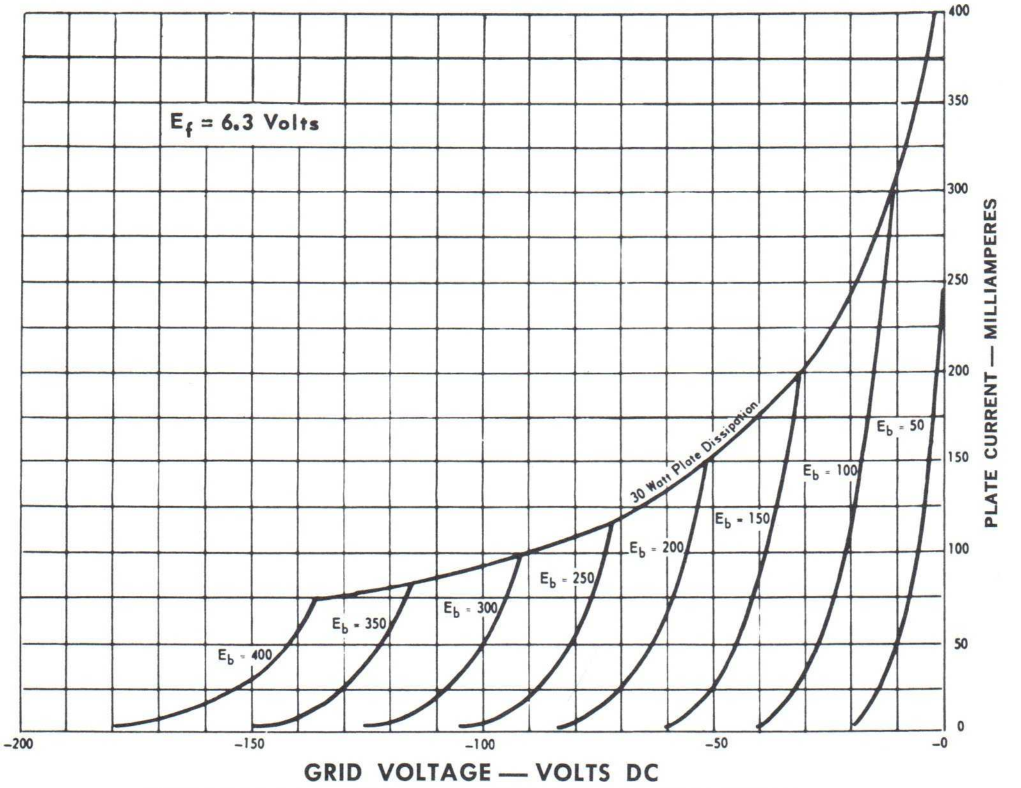

TRANSFER CHARACTERISTICS FOR EACH TRIODE SECTION

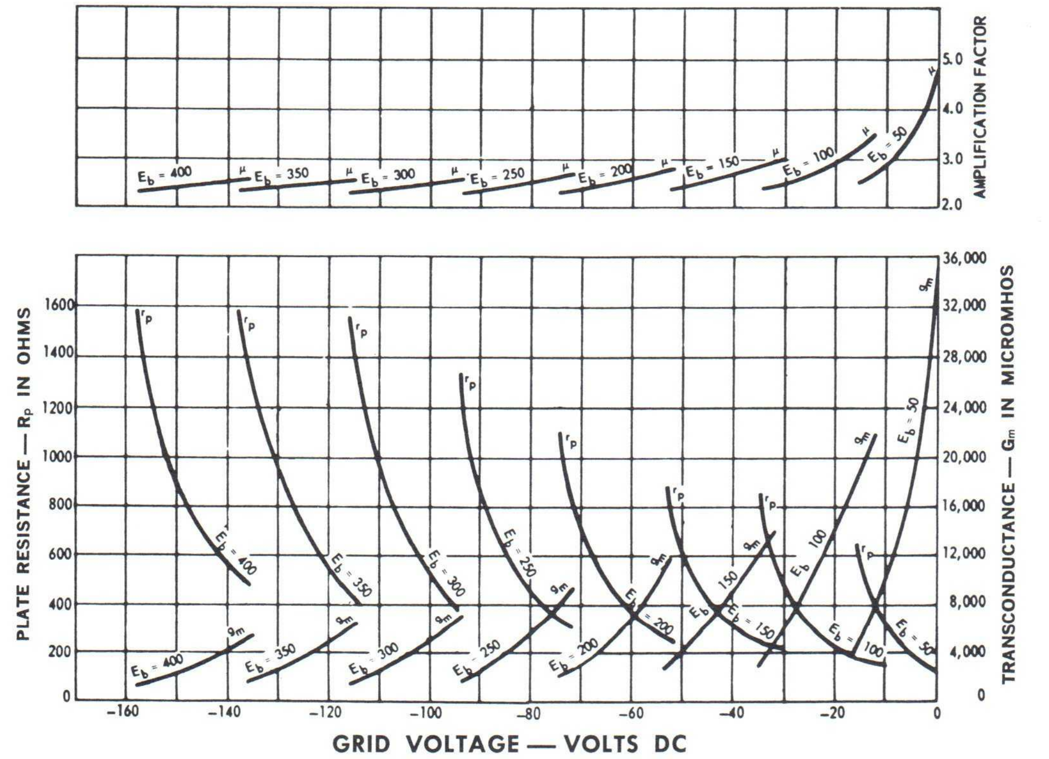

AMPLIFICATION FACTOR, PLATE RESISTANCE AND TRANSCONDUCTANCE CURVES

TUNG-SOL

PRODUCT BULLETIN

INDUSTRIAL ELECTRON TUBE TYPE 6528A

JUNE 1965

MEDIUM MU TWIN POWER TRIODE FOR SERIES REGULATOR SERVICE

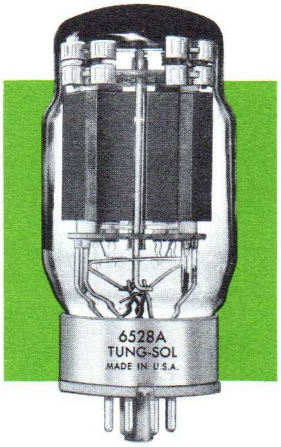

DESCRIPTION The 6528A is a rugged twin power triode well suited for use as a pass tube in series regulated power supplies. Tubes of this design will meet all the requirements of MIL-E-1/1479.

The 6528A is capable of withstanding prolonged exposure to continuous vibration. This performance extra is achieved by using ceramic spacers, rather than mica, to hold electrodes in position. Also, gold plated strap frame grids are used for extra mechanical stiffness.

The 6528A will replace the 6528 in any application.

ELECTRICAL DATA

Heater Voltage	6.3 ± 10%	Volts
Heater Current (E_f = 6.3 volts)	5.0	Amperes
Minimum Cathode Heating Time	30	Seconds
Transconductance (per section)	37,000	Micromhos
Amplification Factor	9.0	
Plate Resistance	245	Ohms

Inter Electrode Capacities per Triode Section	
Grid to Cathode	17.8 uuf
Grid to Plate	23.8 uuf
Cathode to Plate	2.9 uuf
Heater to Cathode	15.0 uuf
Inter Electrode Capacities Between Triode Sections	
Section 1 Plate to Section 2 Plate	0.6 uuf

MECHANICAL DATA

Mounting Position If tube is to be mounted in a horizontal position it is recommended that it be mounted so that the base lug key be either directly up or directly down.	Any
Bulb	T-16 Nonex
Base	Large wafer octal 8 pin with metal sleeve, JEDEC type B8-98

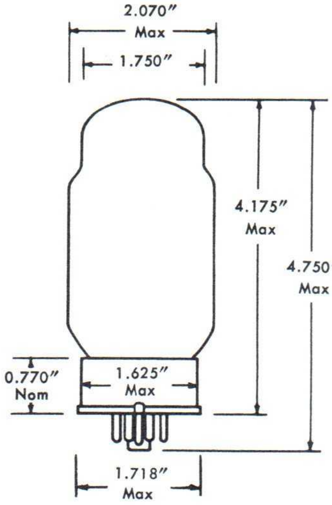

OUTLINE DRAWING

RATINGS, ABSOLUTE VALUES

	Minimum	Maximum	
Plate Dissipation per Plate	—	30	Watts
Plate Current per Plate If tube voltage drop is to be swung more than 6 volts, this current cannot be realized. See Plate Characteristics Curve.	—	300	Milliamperes d. c.
Plate Voltage	0	400	Volts d. c.
Heater-Cathode Voltage	—300	+300	Volts d. c.
Grid Voltage	—300	0	Volts d. c.
Grid Current per Grid	—	0	Milliamperes
Heater Voltage	5.7	6.9	Volts
Envelope Temperature	—	250	Degrees Centigrade
Altitude for Full Ratings If cooling is provided to keep bulb temperature within ratings, altitude rating can be extended to 60,000 feet.	—	10,000	Feet
Grid Circuit Resistance Values			
For Fixed Bias, or Cathode and Fixed Bias Operation	500	50,000	Ohms
For Cathode Bias Operation	500	500,000	Ohms
Resistance per grid leg when triode sections are paralleled	500	—	Ohms

Cathode Resistance: Minimum cathode resistance per cathode leg shall be 10 ohms or that resistance necessary to provide 10% of the grid bias volatge, whichever is greater.

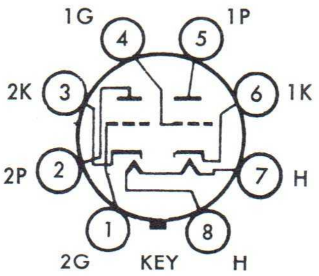

BASING DIAGRAM
BOTTOM VIEW
8BD

APPLICATION NOTES

The 6528A is widely used as a "passing" tube or series regulator tube in controlled power supplies because of its high transconductance at relatively low plate voltages. To provide the desired output current, many triode sections can be paralleled. If tube sections are to be paralleled however, the designer is strongly urged to use sufficient resistance in each cathode leg to equalize current division among the triode sections. Recommended values for various operating currents are shown on the plate characteristics curve. If the output current of the supply is not fixed, use the resistance indicated for the lowest current that approaches the maximum plate dissipation line. Cathode resistance is superior to anode resistance because it helps to provide increasing bias on the sections taking greater plate current. A cathode resistor too, need be only one tenth the value $\left(\frac{R}{u+1}\right)$ of a plate resistor, and therefore will dissipate only one tenth the power. In any case, the only losses incurred in using a resistor is the insertion loss of the resistor itself (less than one watt) and the additional voltage (less than 6 volts) necessary from the unregulated supply. A cathode resistor adds a small additional loss by causing the passing tube to work with higher bias and hence with greater tube drop.

The regulator circuit shown in Figure 2 is preferable from the consideration of the safety of the passing tube both during warmup and in the event of trouble in the amplifier circuit or if the amplifier tube is removed from its socket. It has the additional advantage of providing a constant voltage for the amplifier circuit. However, if the regulated output voltage is low, it may be necessary to provide additional negative voltage for the reference tube circuit. Also, if the regulated output voltage is to be variable, it may be necessary to follow Figure 1. If Figure 1 is used, a clamping diode rated at 300 volts piv should be employed to prevent the grid from swinging positive. The use of this diode is of extreme importance for without it there is little IR drop across the resistor during warmup of the amplifier tube and the grid of the passing tube is effectively tied to the plate. The grid then will attempt to draw excessive current from the passing tube's cathode and may seriously impair cathode life.

Passing tube operation conditions should be chosen to provide as low a tube drop as possible. A safety margin of at least 5 volts from the zero bias line should be allowed however, for variations of individual tubes. If the cathode resistors as suggested on the plate characteristic curve are used, a minimum bias of 5.0 volts will be provided. Sufficient bias excursion should be allowed for overcoming ripple. The amplifier circuit should be able to swing the passing tube grid far enough to counteract the effect of unbalance due to tube ageing.

A grid resistor should be used for each triode section. This should be high enough to prevent parasitic oscillation but not large enough to prevent loss of control due to a small amount of "gas" grid current. A value of grid resistance that meets both these conditions is 1,000 ohms. Heater voltage should be kept as close as possible to 6.3 volts as measured on the tube pins. When connecting many high drain tube heaters across a single transformer, bus bars feeding from "alternate ends" (Figure 3) should be used with a pair of stranded wires feeding individual sockets.

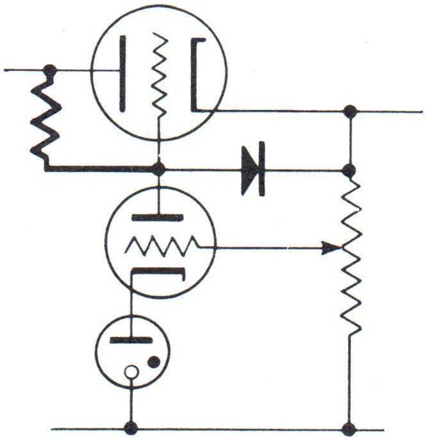

FIGURE 1

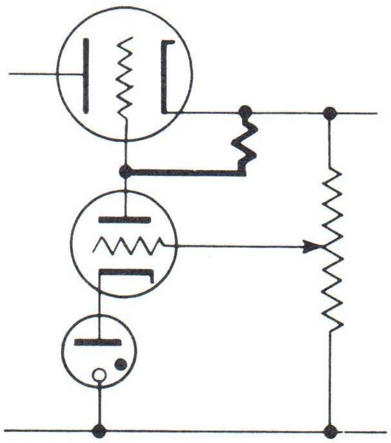

FIGURE 2

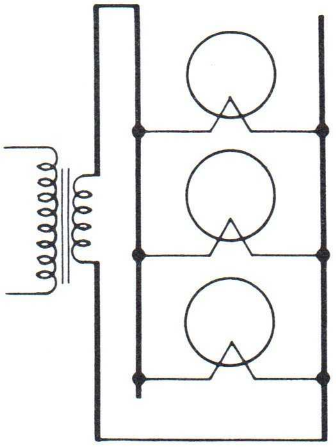

FIGURE 3

AVERAGE PLATE CHARACTERISTICS FOR EACH TRIODE UNIT

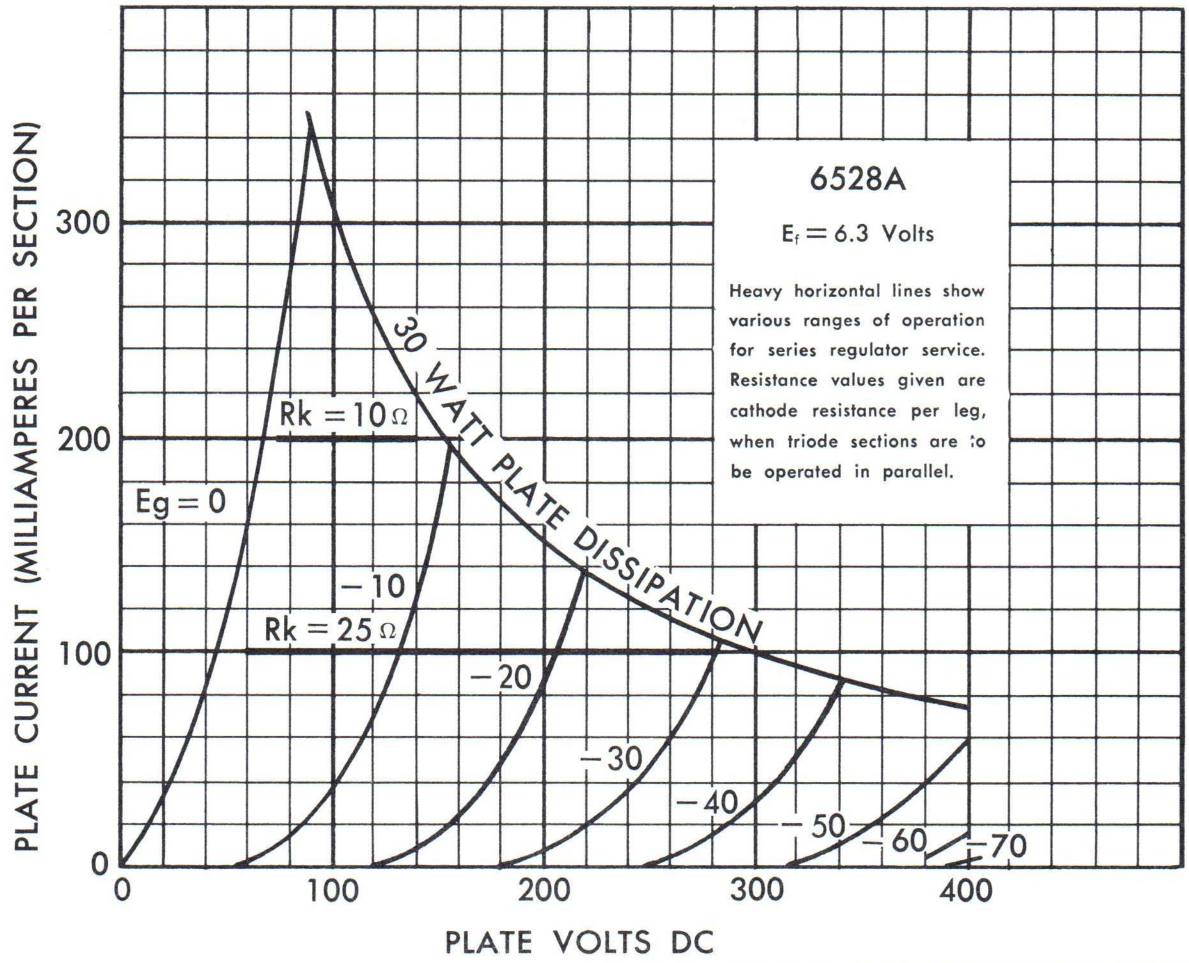

6528A

$E_f = 6.3$ Volts

Heavy horizontal lines show various ranges of operation for series regulator service. Resistance values given are cathode resistance per leg, when triode sections are to be operated in parallel.

TYPE 6528A

TRANSFER CHARACTERISTICS FOR EACH TRIODE SECTION

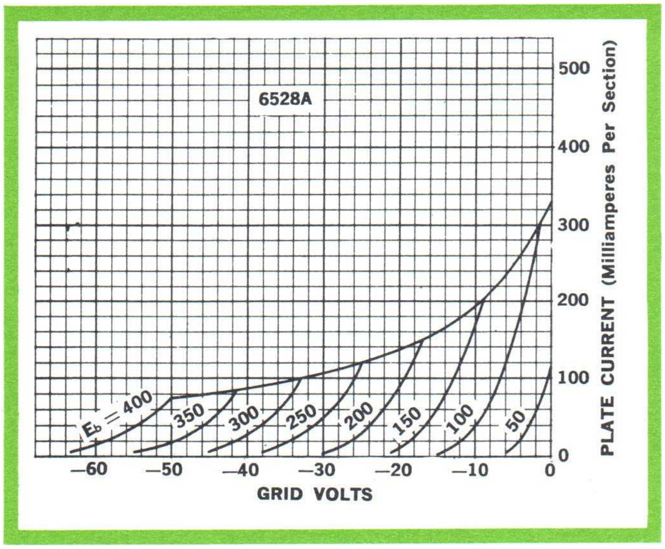

AVERAGE CHARACTERISTICS

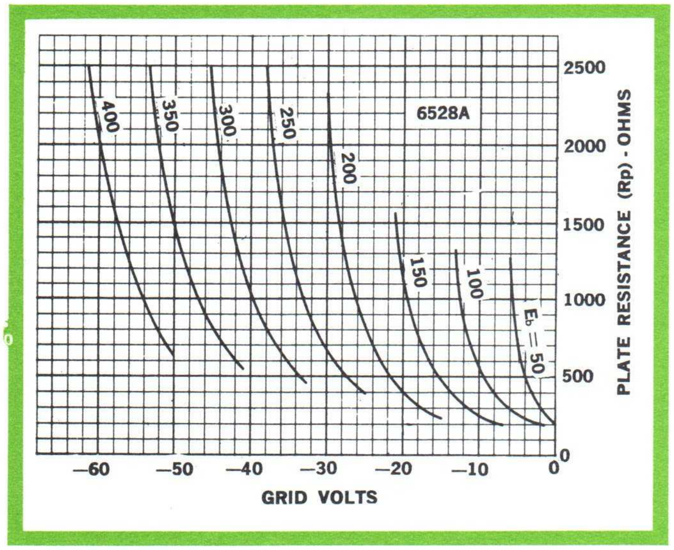

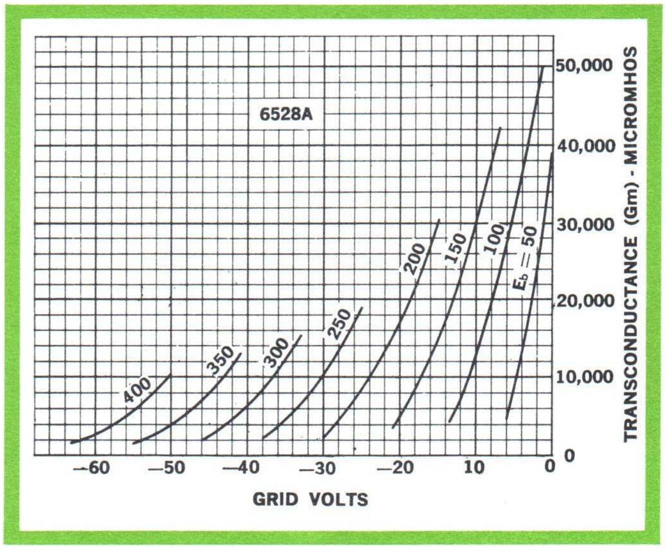

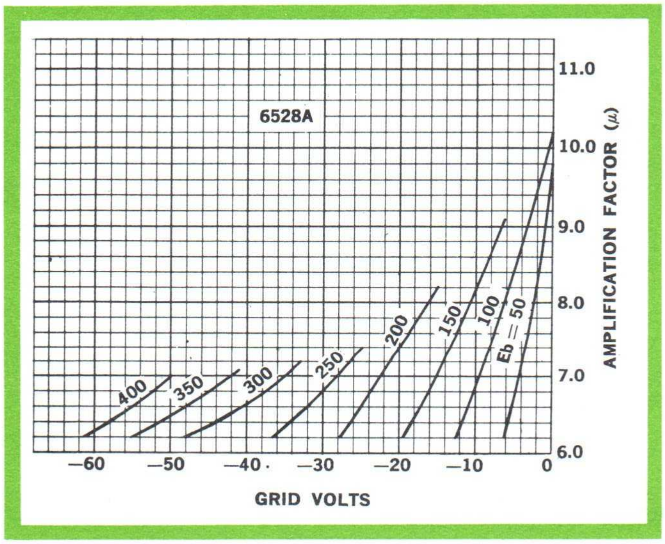

TUNG-SOL

PRODUCT BULLETIN

INDUSTRIAL ELECTRON TUBES
TYPE 7403
JUNE 1965

PULSE BEAM POWER TUBE

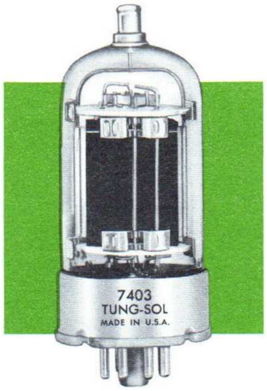

DESCRIPTION — The 7403 is a rugged, reliable beam power tube designed for pulse service. It will deliver pulse power outputs in the order of 20 kw.

[redacted]

Construction features include a hard glass envelope, ceramic electrode spacers and a non-charring glass bonded mica base wafer.

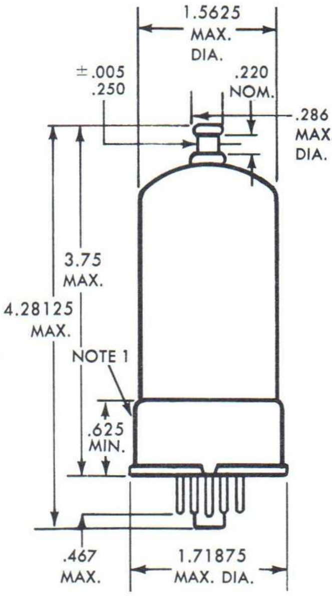

OUTLINE DRAWING

MAXIMUM RATINGS

ABSOLUTE MAX. SYSTEM — SEE EIA STANDARD RS-239

DC Plate Voltage — Note 1	4000 Volts
Peak Plate Voltage including Transient — Note 2	5000 Volts
Grid 2 Voltage — Note 1	850 Volts
Negative DC Grid 1 Voltage	200 Volts
Negative Peak Grid 1 Voltage — Note 1	500 Volts
Positive Peak Grid 1 Voltage — Note 1	220 Volts
Plate Dissipation	40 Watts
Grid 2 Dissipation	3.5 Watts
Grid 1 Dissipation	0.5 Watt
D-C Cathode Current	150 Milliamperes
Peak Cathode Current— See Rating Chart	10 Amperes

Notes: 1. Series resistance must be inserted in the power supply sufficient to limit the short circuit current to less than 0.5 ampere.

2. With a screen potential not exceeding 400Vdc and when no instantaneous voltage due to transient is present (essentially resistive plate load) a maximum plate potential of 4500Vdc may be used.

HEATER CHARACTERISTICS AND RATINGS

ABSOLUTE MAX. SYSTEM — SEE EIA STANDARD RS-239

Heater Sections Parallel Connected:			
Average Characteristics	6.3 Volts	1.70	Amp
Limits of Applied Voltage		5.7 to 6.9	Volts
Heater — Cathode Voltage — Either Polarity		Max. 500	Volts
Cathode Heating Time		Min. 30	Sec.

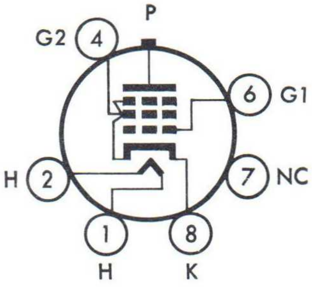

TERMINAL DIAGRAM
BOTTOM VIEW

INTERELECTRODE CAPACITANCES

	Min.	Max.
Grid to Plate	—	2.2 Picofarads
Input	13	21 Picofarads
Output	7.5	12.5 Picofarads

MECHANICAL DATA

Mounting Position	Any
Maximum Bulb Temperature	300°C
Maximum Altitude	80,000 Feet
Bulb	T-12 Hard Glass
Base	Glass bonded mica large wafer octal, 6 pin, with metal shell.
Cap	See Outline page 8
Maximum Weight	4 ounces

PULSE RATING CHART

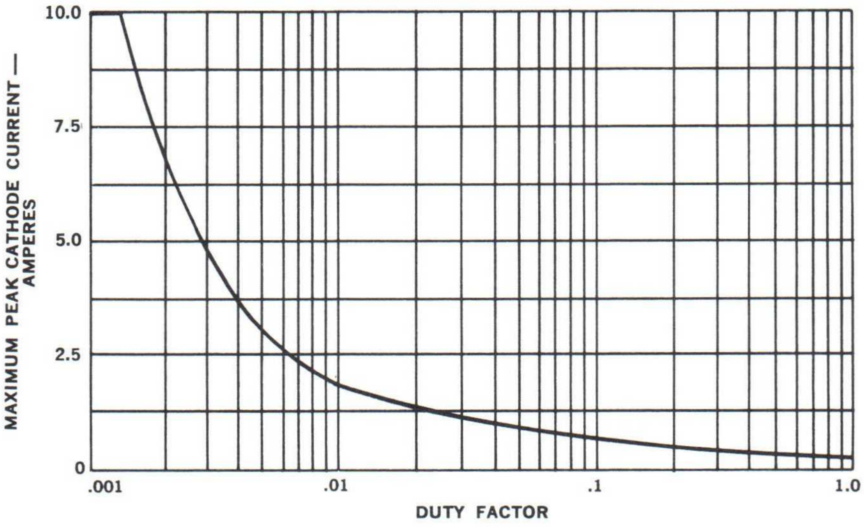

Definitions: Duty factor (10,000 microsecond averaging time) is the ratio of "on" time in microseconds to 10,000 microseconds.

"On" Time is defined as the sum of the duration of all individual pulses which occur during any 10,000 microsecond interval.

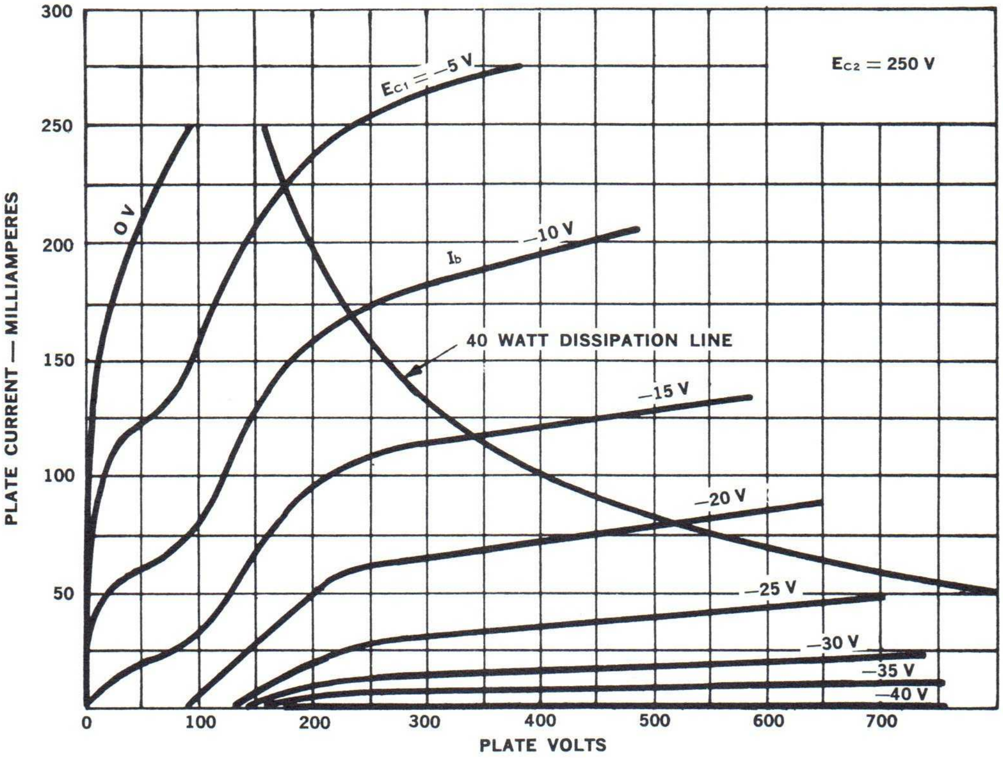

PLATE CURRENT — MILLIAMPERES
PLATE VOLTS
0
50
100
150
200
250
300
0
100
200
300
400
500
600
700
E_{c2} = 250 V
E_{c1} = −5 V
0 V
I_b
−10 V
40 WATT DISSIPATION LINE
−15 V
−20 V
−25 V
−30 V
−35 V
−40 V

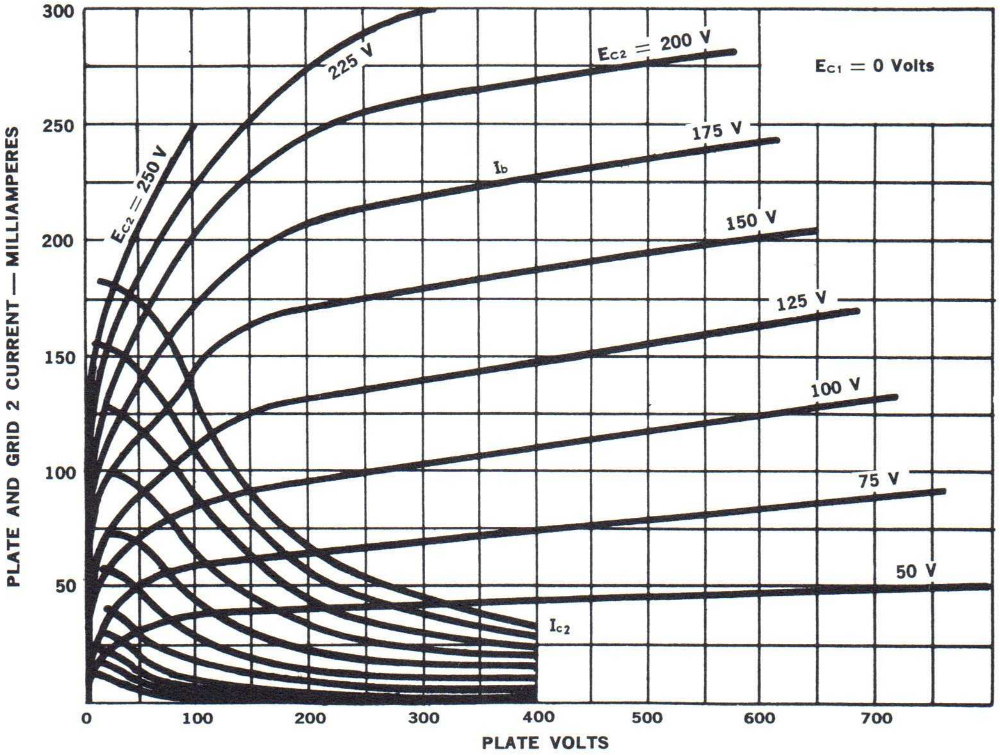

PLATE AND GRID 2 CURRENT — MILLIAMPERES
PLATE VOLTS
0
50
100
150
200
250
300
0
100
200
300
400
500
600
700
E_{c1} = 0 Volts
E_{c2} = 250 V
225 V
E_{c2} = 200 V
175 V
I_b
150 V
125 V
100 V
75 V
50 V
I_{c2}

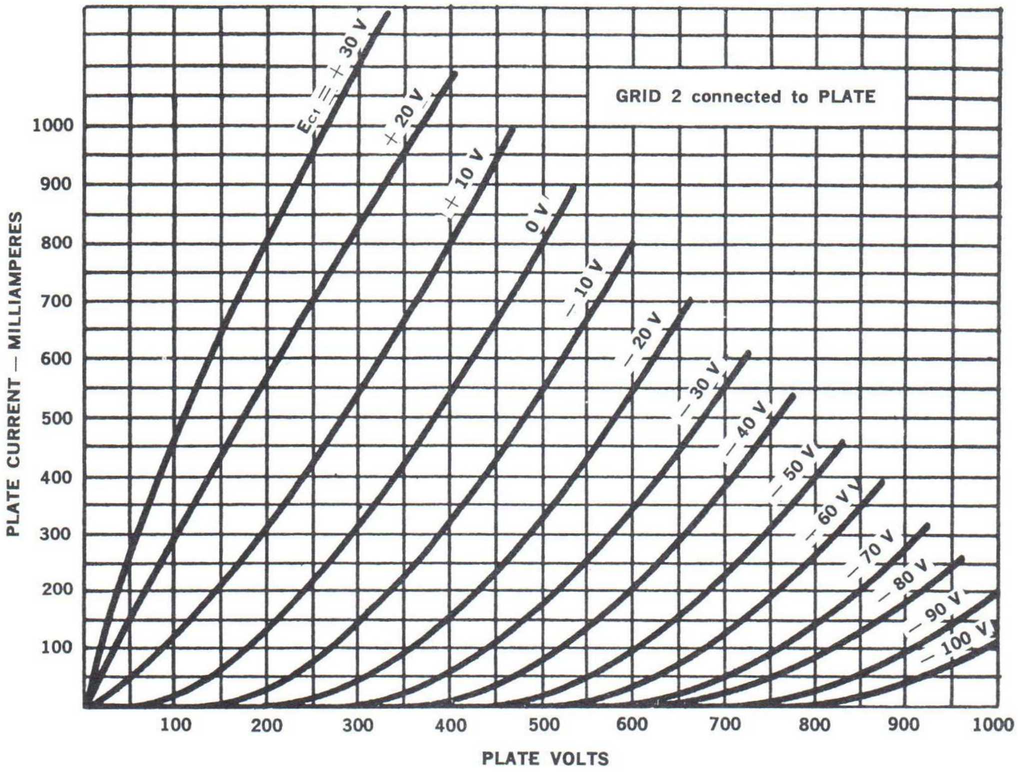
GRID 2 connected to PLATE
Ec1 = + 30 V
+ 20 V
+ 10 V
0 V
− 10 V
− 20 V
− 30 V
− 40 V
− 50 V
− 60 V
− 70 V
− 80 V
− 90 V
− 100 V
PLATE CURRENT — MILLIAMPERES
1000
900
800
700
600
500
400
300
200
100
100
200
300
400
500
600
700
800
900
1000
PLATE VOLTS

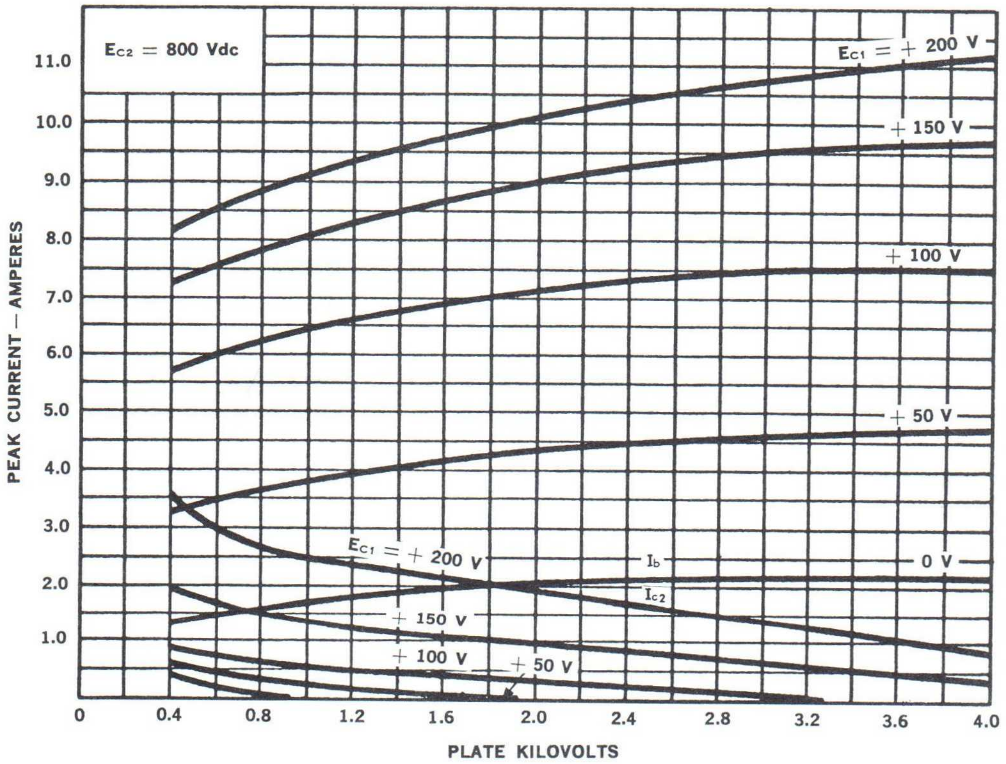
Ec2 = 800 Vdc
Ec1 = + 200 V
+ 150 V
+ 100 V
+ 50 V
0 V
Ec1 = + 200 V
Ib
Ic2
+ 150 V
+ 100 V
+ 50 V
PEAK CURRENT — AMPERES
11.0
10.0
9.0
8.0
7.0
6.0
5.0
4.0
3.0
2.0
1.0
0
0.4
0.8
1.2
1.6
2.0
2.4
2.8
3.2
3.6
4.0
PLATE KILOVOLTS

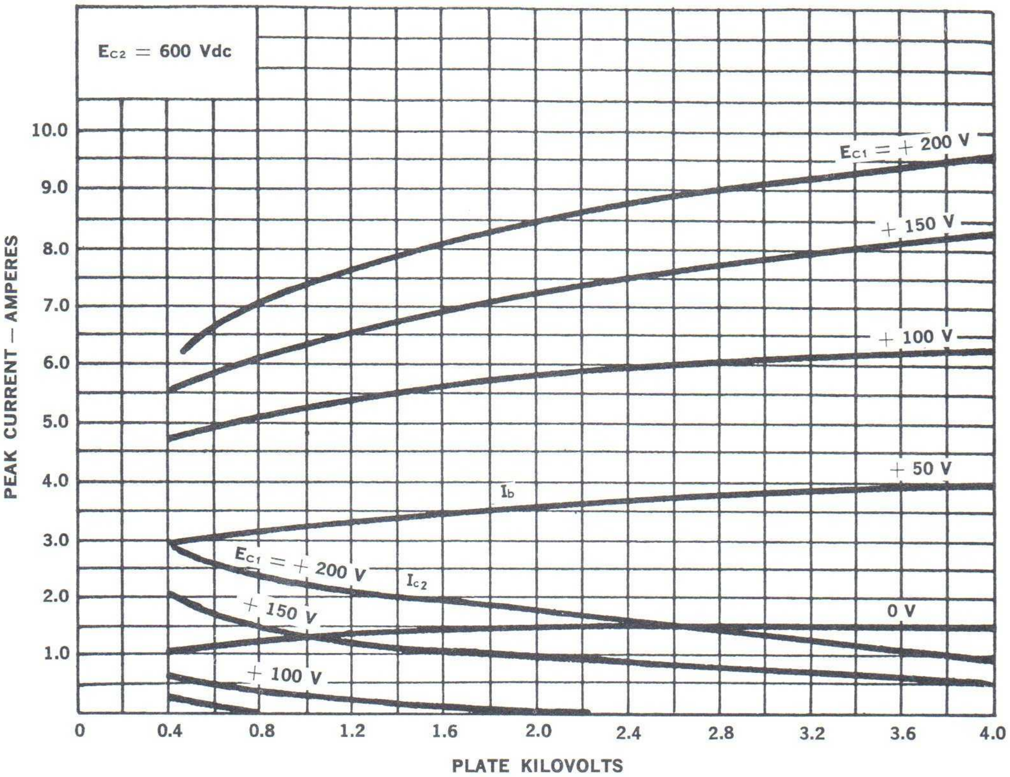
E_{C2} = 600 Vdc
E_{C1} = + 200 V
+ 150 V
+ 100 V
+ 50 V
I_b
E_{C1} = + 200 V
I_{c2}
+ 150 V
0 V
+ 100 V
PEAK CURRENT — AMPERES
10.0
9.0
8.0
7.0
6.0
5.0
4.0
3.0
2.0
1.0
0
0.4
0.8
1.2
1.6
2.0
2.4
2.8
3.2
3.6
4.0
PLATE KILOVOLTS

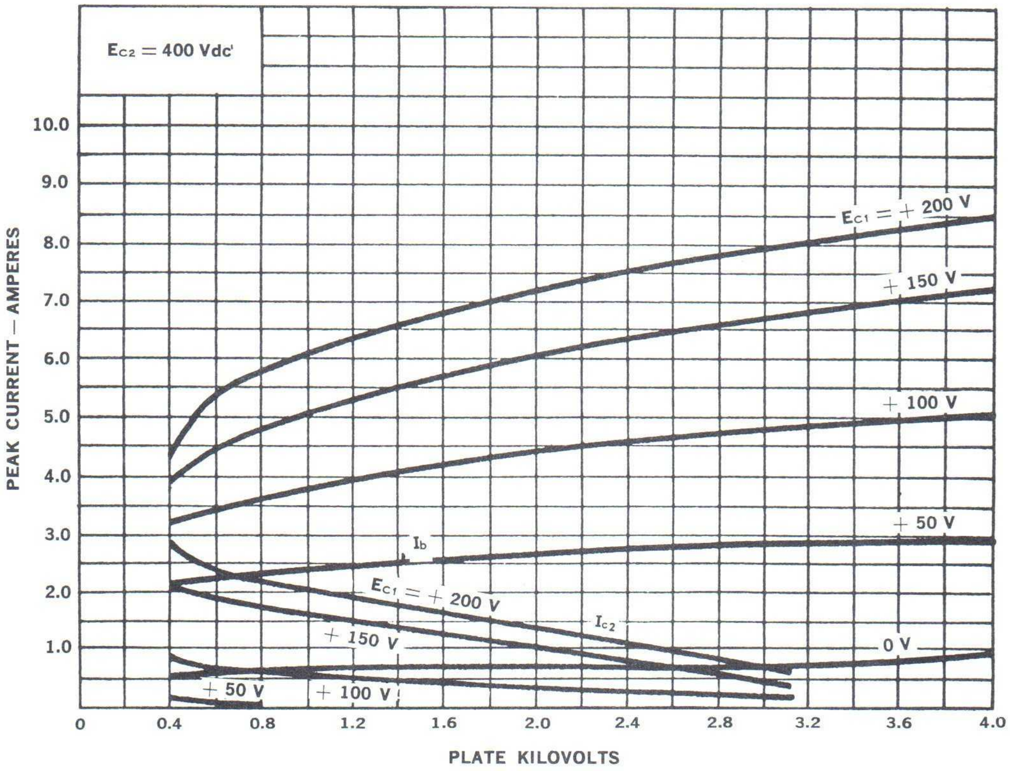
E_{C2} = 400 Vdc
E_{C1} = + 200 V
+ 150 V
+ 100 V
+ 50 V
I_b
E_{C1} = + 200 V
I_{c2}
+ 150 V
0 V
+ 50 V
+ 100 V
PEAK CURRENT — AMPERES
10.0
9.0
8.0
7.0
6.0
5.0
4.0
3.0
2.0
1.0
0
0.4
0.8
1.2
1.6
2.0
2.4
2.8
3.2
3.6
4.0
PLATE KILOVOLTS

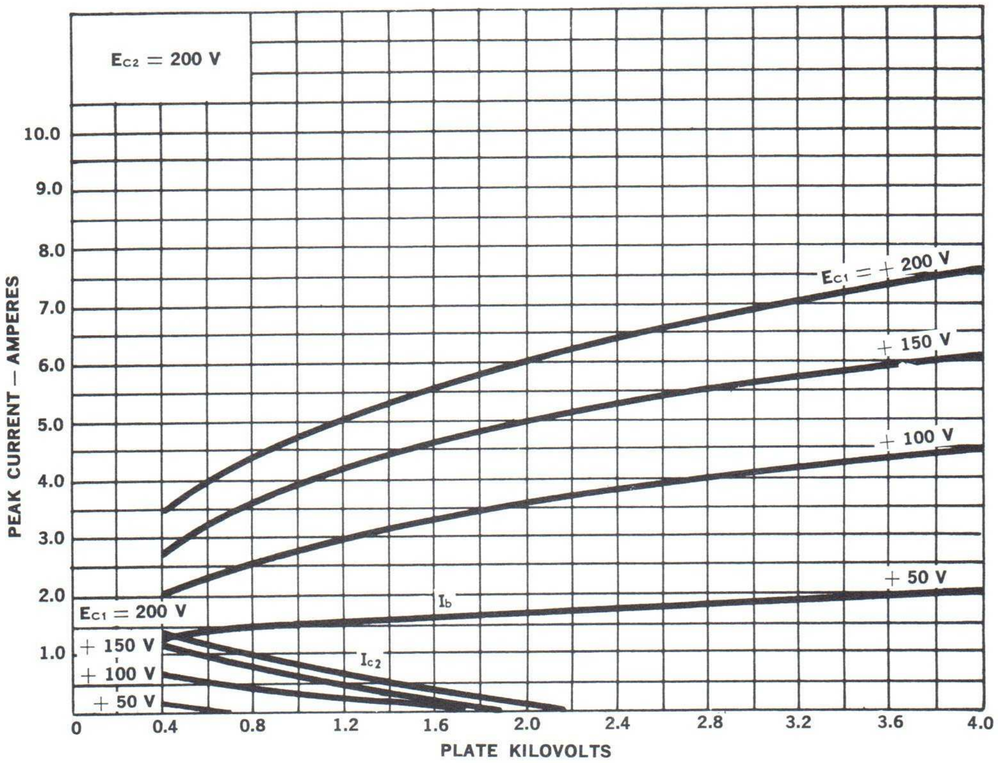
E_{c2} = 200 V
PEAK CURRENT — AMPERES
10.0
9.0
8.0
7.0
6.0
5.0
4.0
3.0
2.0
1.0
E_{c1} = + 200 V
+ 150 V
+ 100 V
+ 50 V
I_b
E_{c1} = 200 V
+ 150 V
+ 100 V
+ 50 V
I_{c2}
0
0.4
0.8
1.2
1.6
2.0
2.4
2.8
3.2
3.6
4.0
PLATE KILOVOLTS

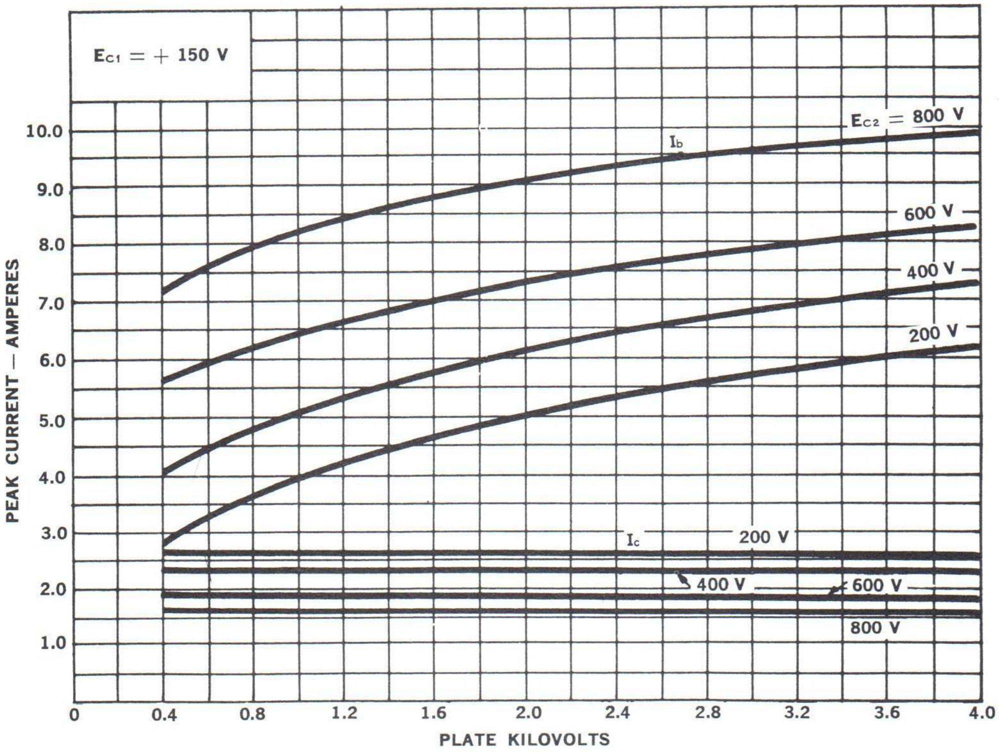
E_{c1} = + 150 V
PEAK CURRENT — AMPERES
10.0
9.0
8.0
7.0
6.0
5.0
4.0
3.0
2.0
1.0
E_{c2} = 800 V
I_b
600 V
400 V
200 V
I_c
200 V
400 V
600 V
800 V
0
0.4
0.8
1.2
1.6
2.0
2.4
2.8
3.2
3.6
4.0
PLATE KILOVOLTS

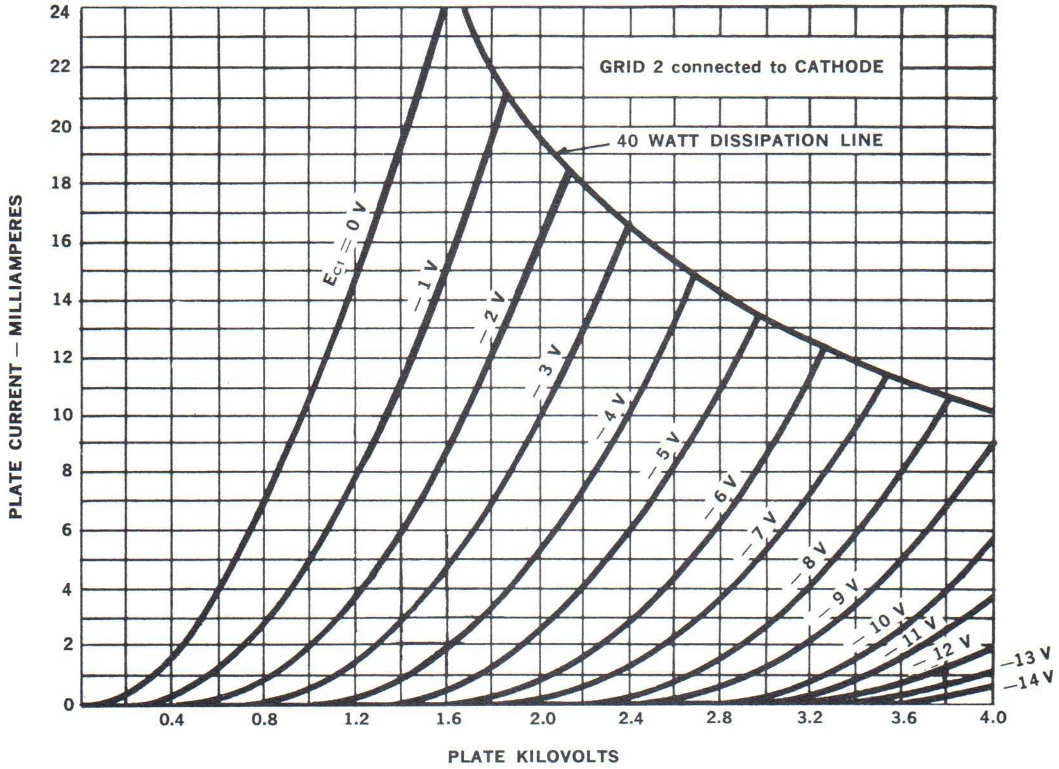
GRID 2 connected to CATHODE
40 WATT DISSIPATION LINE
E_{c1} = 0 V
—1 V
—2 V
—3 V
—4 V
—5 V
—6 V
—7 V
—8 V
—9 V
—10 V
—11 V
—12 V
—13 V
—14 V
PLATE CURRENT — MILLIAMPERES
24
22
20
18
16
14
12
10
8
6
4
2
0
0.4
0.8
1.2
1.6
2.0
2.4
2.8
3.2
3.6
4.0
PLATE KILOVOLTS

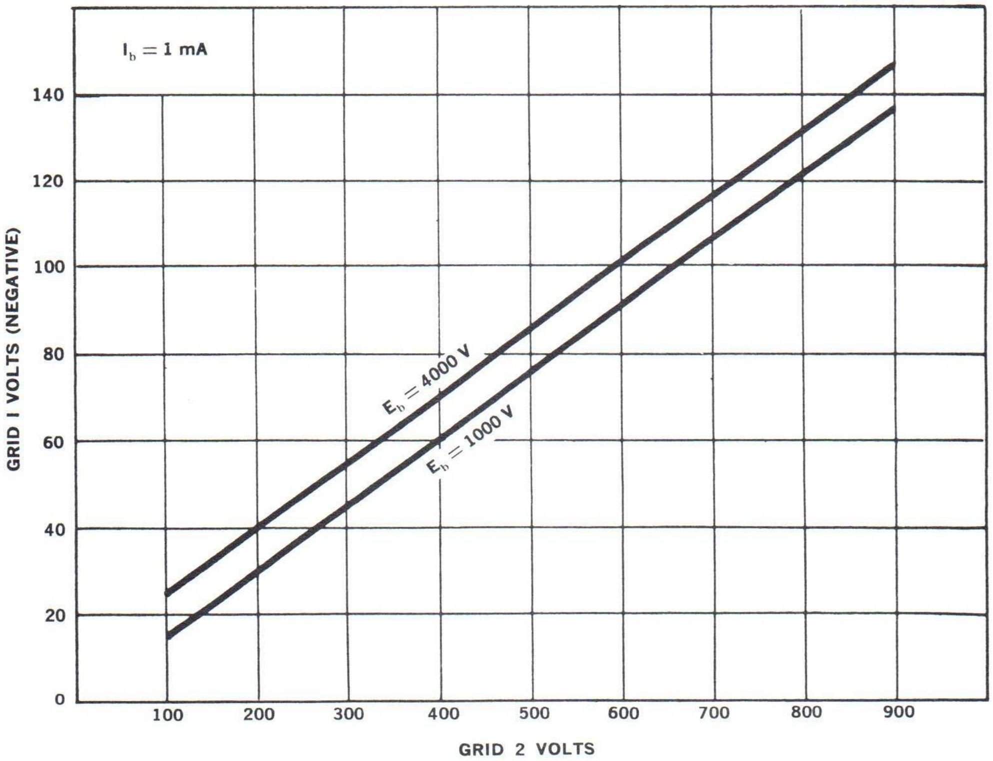
I_b = 1 mA
E_b = 4000 V
E_b = 1000 V
GRID I VOLTS (NEGATIVE)
140
120
100
80
60
40
20
0
100
200
300
400
500
600
700
800
900
GRID 2 VOLTS

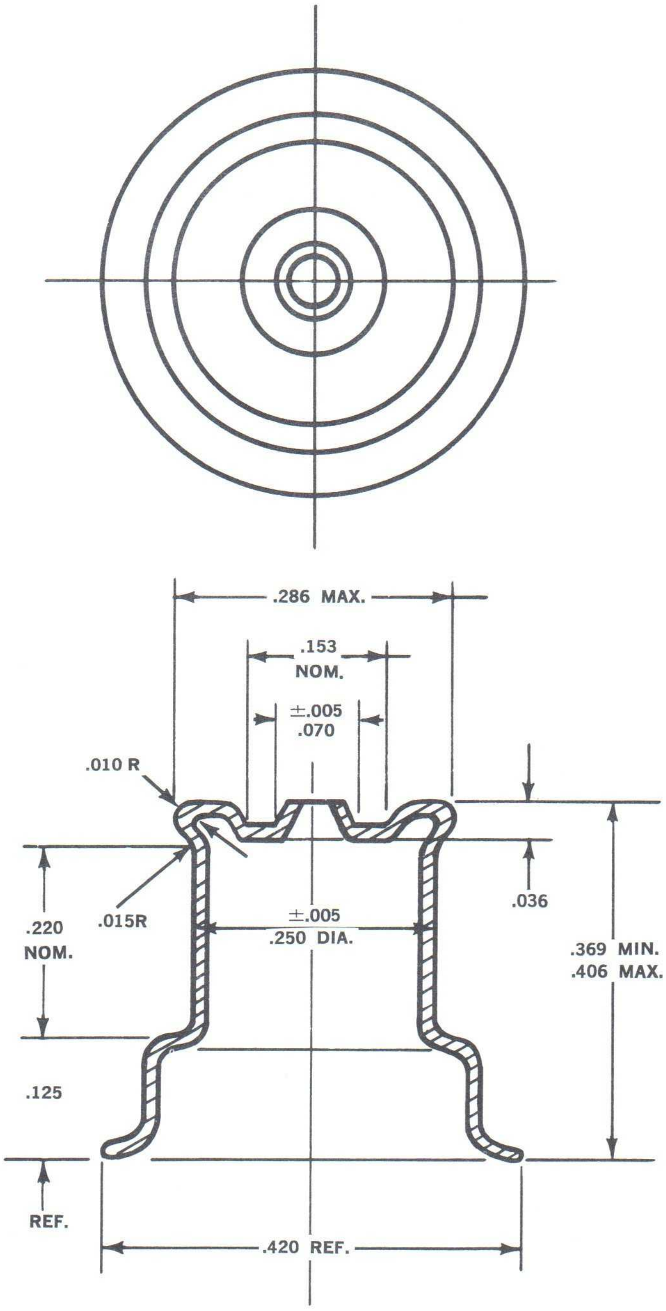
.286 MAX.
.153
NOM.
±.005
.070
.010 R
.015R
.220
NOM.
±.005
.250 DIA.
.036
.369 MIN.
.406 MAX.
.125
REF.
.420 REF.

TUNG-SOL

PRODUCT BULLETIN

INDUSTRIAL ELECTRON TUBE TYPE 7455

JANUARY 1963

CLIPPER THYRATRON

DESCRIPTION—The 7455 is a zero bias, short ionization time hydrogen thyratron specially designed to pass high fault currents as an inverse clipper in line-type radar modulators. The tube, when triggered, terminates the pulse-forming network in its characteristic impedance thereby reducing the inverse voltage to zero during both normal and load fault conditions. It also reduces to a minimum the inverse spike energy that otherwise would have to be dissipated by the switch tube anode.

The low anode 'firing' voltage and ability to carry very large peak (fault) currents make a hydrogen clipper thyratron ideal for this application. The 7455 is capable of clipping at a switch-tube power level of 33 megawatts in a line-type modulator. A hydrogen reservoir is included to promote long life by providing a method of automatically replenishing hydrogen lost by 'cleanup'.

7455
TUNG-SOL

ELECTRICAL DATA

	Minimum	Bogey	Maximum	
Heater Voltage	4.75	5.00	5.25	Volts
Heater Current—Ef = 5.0 volts	15	20	25	Amperes
Cathode Heating Time	3	—	—	Minutes
Anode Voltage Drop	—	—	300	Volts
Altitude	—	—	10,000	Feet
Ambient Temperature	—55	—	+75	Degrees Centigrade

MECHANICAL DATA

Type of Cooling	Convection
Mounting Position	Base down or horizontal
Maximum Net Weight	2¼ pounds
Mounting Data	Three 5/16 in. diameter holes spaced 120° on 4⅜ in. diameter
Chassis Hole	3 inches
Grid Connector	Tung-Sol/Chatham Part No. 2556-A
Shock—Maximum	500G acceleration with 1 millisecond duration

MAXIMUM RATINGS — ABSOLUTE VALUES

	Min.	Max.	
D C Anode Voltage, Inverse (Note 1)	—	33	Kilovolts
D C Anode Voltage, Critical (Note 2)	1,000	—	Volts
Cathode Current (Note 3)			
RMS—Continuous	—	8.5	Amperes
RMS—Fault—Averaging Time 3 seconds	—	16	Amperes
Peak—Continuous	—	800	Amperes
Peak—Fault	—	2,900	Amperes
Operating Frequency (Note 4)	—	2,500	Cycles-per-second
Grid Voltage—Peak Forward	600	—	Volts
Grid Voltage—Peak Inverse	—	3,000	Volts
Grid Trigger Current—Peak	6	15	Amperes
Trigger Pulse Width (Note 5)	0.5	—	Microsecond
Trigger Lead Time (Notes 6 & 7)	0.2	—	Microsecond

Notes:

1. Inverse anode voltage in a clipper tube is defined as the peak voltage that can be impressed between anode and cathode with a polarity opposite to that producing current flow in the tube. Generally, it has the same magnitude as the maximum network voltage.
2. Critical anode voltage in the clipper tube is defined as the minimum anode voltage at which anode conduction occurs. The actual rating allows sufficient safety factor to enable minimum delay of anode conduction.
3. Cathode Current
   a. RMS cathode current is defined as the maximum effective current flowing through the clipper tube under any condition of operation for a period not exceeding the average time. The interval over which the averaging time is applied must include the period in which the maximum rms fault current is encountered.
   b. Peak fault current is defined as the maximum value of instantaneous current flowing in a clipper tube when a fault occurs in the load circuit.
   c. In determining circuit parameters, care must be observed to insure that the nominal rms current (without load faulting) is of such a value as to prevent the rms current (with load faulting) from exceeding the rating during the specified average time.
4. The maximum operating frequency does not necessarily represent the upper limit, but is the highest frequency at which tests have been conducted.
5. The trigger pulse width should not exceed the load pulse width plus the trigger pulse lead time.
6. The minimum trigger lead time is defined as the period between the time at which the leading edge of the unloaded grid pulse reaches 50 percent of its maximum value and the time at which the clipper tube anode becomes positive.
7. The maximum trigger pulse lead time should not exceed 80 percent of the trigger pulse width.

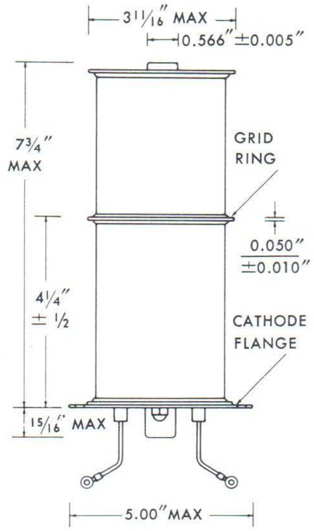

OUTLINE DRAWING

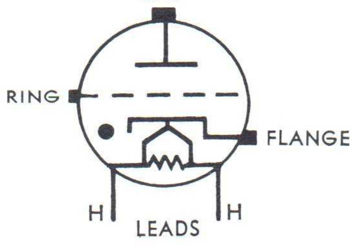

BOTTOM VIEW

APPLICATION NOTES

The typical line-type radar modulator comprises a switch tube, a load, a pulse-forming network, and usually a clipping device. The load is normally a magnetron, or klystron coupled to the modulator by a pulse transformer. Most often, the network is negatively matched, that is, the impedance of the load is smaller than the characteristic impedance of the network. The result of this mismatch is that a negative voltage remains on the network after the main discharge pulse, and the voltage is added to the supply voltage on the next charging cycle. When a load fault occurs, the mismatch is increased and the negative voltage rises placing a higher positive voltage on the pulse-forming network. Prolonged faults produce successively higher network voltages resulting in dangerously high voltages on the circuit components. The negative mismatch voltage also produces an inverse current pulse in the switch tube immediately after the main discharge pulse. As this current decays very rapidly, an inverse spike voltage appears across the tube. The resulting energy must be dissipated by the switch tube anode.

The main advantages gained by employing a clipper device in a modulator circuit include:

a. protection of components from excess voltage produced during load faults,

b. regulation of output pulse amplitude, and

c. reduction of inverse spike energy that has to be dissipated by the switch tube.

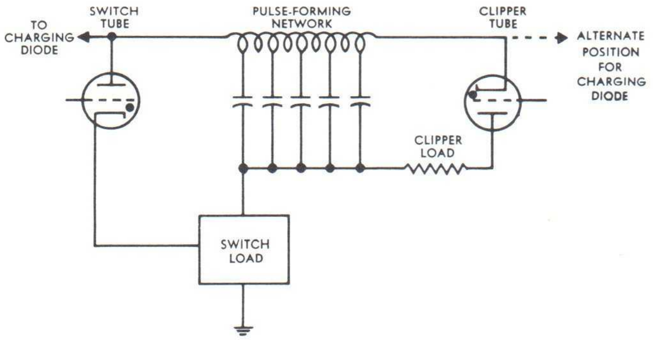

FIGURE 1. END OF LINE CLIPPER

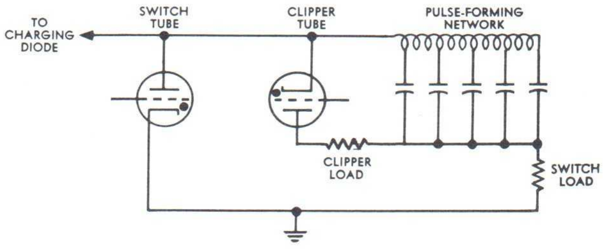

FIGURE 2. FRONT OF LINE CLIPPER

A gas tube with its inherent low internal impedance and high peak and average current handling capacity is ideally suited for clipper applications as it is not practical to obtain optimum clipping with a vacuum device.

Two of the most popular clipping methods are illustrated in figures 1 and 2. The configuration of figure 1 is preferred. In it the clipper tube is connected across the far end of the pulse-forming network in series with a resistive load the value of which approximates the network impedance. With the clipper in this location, the inverse spike can be almost completely eliminated and simple triggering means can be employed. In the front-of-line clipper, illustrated in figure 2, if the load impedance is less than the network impedance, as is usually the case, a resistor must be inserted in series with the clipper tube. The value of this resistance should be chosen to approximate the network impedance.

The relation between switch-tube currents and clipper-tube currents in a line modulator are shown in graphic form in figures 3, 4 and 5. The ratio of switch tube to clipper tube peak current as a function of R_L/Z_O is shown in figure 3. During normal operation, the clipper tube peak current is usually no greater than one-half the switch tube peak current. However, under a fault condition, the clipper tube peak current is 0.7 times the switch tube fault current, and may be four times the normal clipper tube peak current depending on the ratio R_L/Z_O. The ratio of the rms clipper tube to switch tube currents as a function of R_L/Z_O with the ratio of rise time to pulse width (f) as a parameter, is shown in figure 4. During a load fault, R_L becomes zero and the rms clipper current is just one-half the rms switch tube fault current. However, under certain conditions the rms clipper current may be as much as four times the steady-state value. A similar graph, figure 5, presents the relationship between the average currents in the switch tube and the clipper tube.

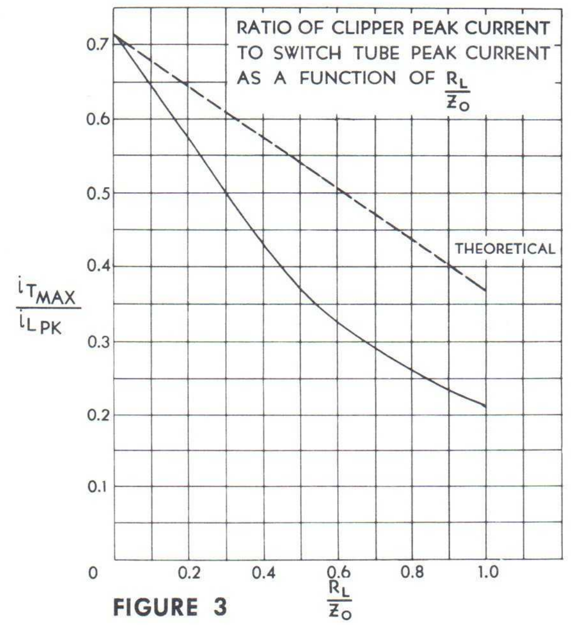

FIGURE 3

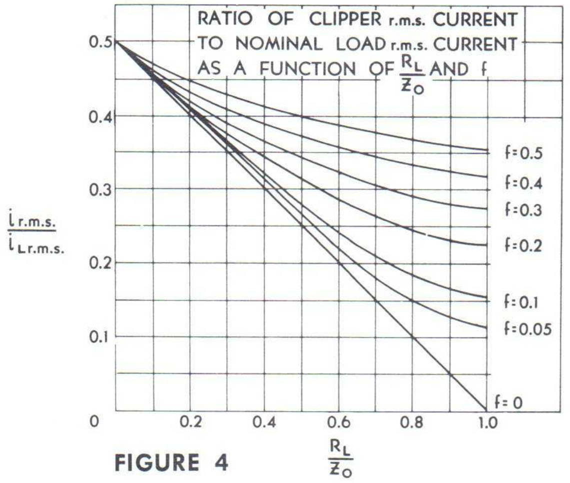

FIGURE 4

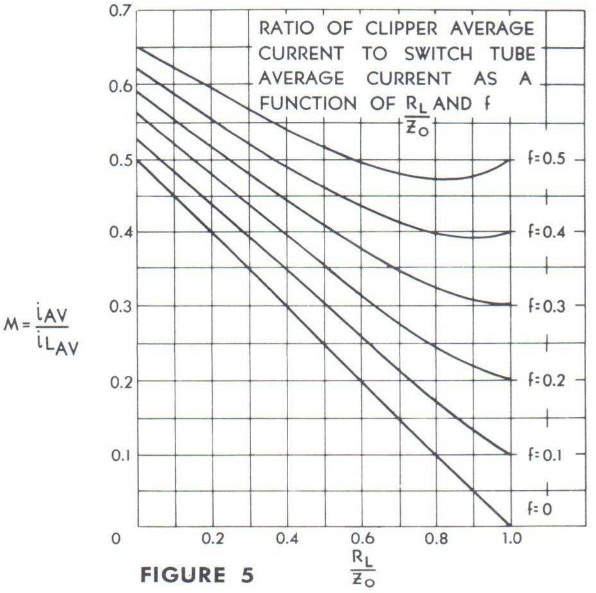

FIGURE 5

$i_{T\,max}$ = peak clipper tube current

$i_{L\,peak}$ = peak load current

R_L = load resistance

Z_0 = characteristic network impedance

f = ratio of load current rise time to pulse width

i_{rms} = rms clipper tube current

i_{Lrms} = rms load current

i_{av} = average clipper tube current

i_{Lav} = average load current

While a thyratron clipper requires an additional grid connection not needed for a diode clipper, the thyratron can be triggered at the optimum time demanded by the circuit. This fact, plus the inherent ability of a grided tube to hold off high inverse voltage, makes the thyratron a trouble-free clipping device.

The clipper tube may be triggered in a number of ways. It has been determined that the most effective clipping occurs when the clipper tube grid is triggered at least several hundred millimicroseconds before the initial voltage wave reaches the far end of the line. The simplest triggering method consists of a one-turn primary pulse transformer and is illustrated in figure 6. In this circuit, a trigger pulse of the proper lead time, polarity and amplitude is obtained directly from the pulse-forming network. Thus triggering is accomplished in a simple manner without loading the pulse-forming line. The methods shown in figures 7 and 8 will also fill the triggering time requirement. However, if the divider impedances are too low, the output pulse shape will be affected. The trigger circuit of figure 8 can also be employed in "tailbiting" and voltage clamping service.

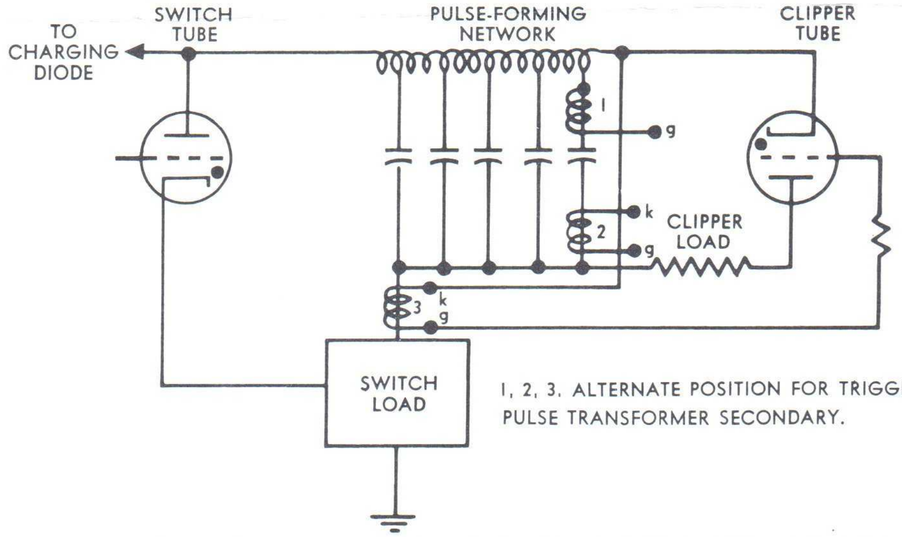

1, 2, 3. ALTERNATE POSITION FOR TRIGGER PULSE TRANSFORMER SECONDARY.

FIGURE 6. TRANSFORMER-COUPLED TRIGGERING CIRCUIT

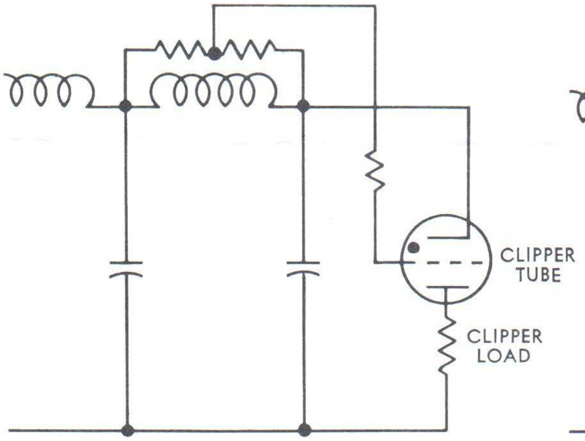

FIGURE 7.
RESISTOR-COUPLED TRIGGERING CIRCUIT

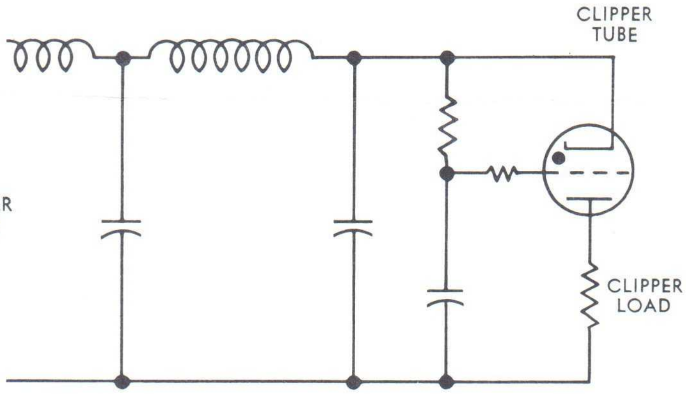

FIGURE 8.
R-C TRIGGERING CIRCUIT

(1)

Tung-Sol/Chatham CROWBAR Thyratrons

PROTECT HIGH-POWER CIRCUITS AGAINST DESTRUCTIVE ARCS

Any one of a host of causes can trigger internal arcs in high-power tubes with little or no warning . . . even if the tubes are well designed, operate in well-engineered circuits, and have conservative demands placed upon them. Cosmic rays, line-voltage transients, parasitic oscillations, spurious primary and secondary electrons and material whiskers are just a few of the potential sources of these highly destructive arcs.

But by engineering Tung-Sol/Chatham high reliability crowbar hydrogen thyratrons into your design, you can safeguard against costly arc-generated breakdowns. By short-circuiting destructive currents, these zero bias "arc-busters" extinguish the arcs before circuit elements can be damaged.

Instantaneous response and the ability to carry extremely large currents make these rugged thyratrons ideally suited for this purpose. Moreover, they are able to conduct these heavy surge currents even after having been idle for long periods. Each tube contains a hydrogen reservoir which promotes long life and permits optimum gas pressure adjustment for various operating conditions. Write for full technical details. Tung-Sol Electric Inc., Newark 4, N. J. TWX: NK193

Technical assistance is available through the following sales offices: Atlanta, Ga.; Columbus, Ohio; Culver City, Calif.; Dallas, Texas; Denver, Colo.; Detroit, Mich.; Irvington, N. J.; Melrose Park, Ill.; Newark, N. J.; Philadelphia, Pa.; Seattle, Wash. Canada: Toronto, Ont.

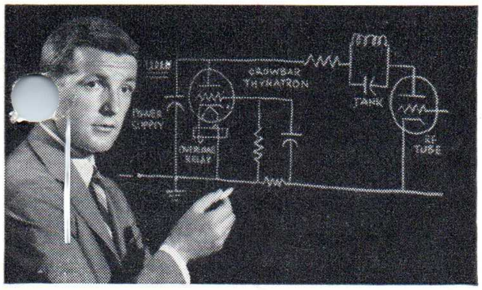

Typical application: *A crowbar thyratron is connected in series with a suitable impedance across the filter of the high voltage power supply for a high frequency amplifier tube. Whenever an arc occurs in the power tube, the rising current is used to deliver a suitable signal to the grid of the thyratron. The thyratron immediately conducts to short circuit the power supply, until the protective circuit breaker opens 0.1 second later.*

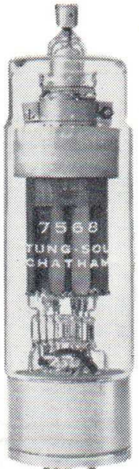

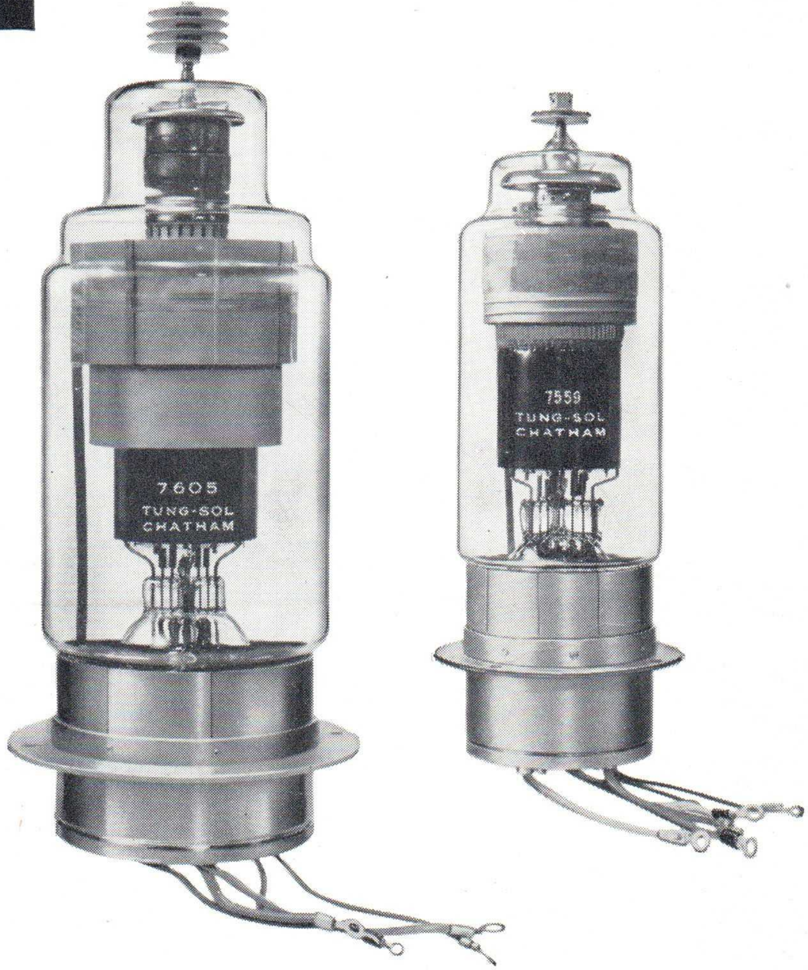

Type	DC. Anode Forward Voltage	Peak Cathode Current
7559	18KV	1500A
7568	25KV	800A
7605	25KV	2500A

TUNG-SOL®

TIME-SAVING GUIDE FOR...

SPECIFYING DEFLECTION YOKES

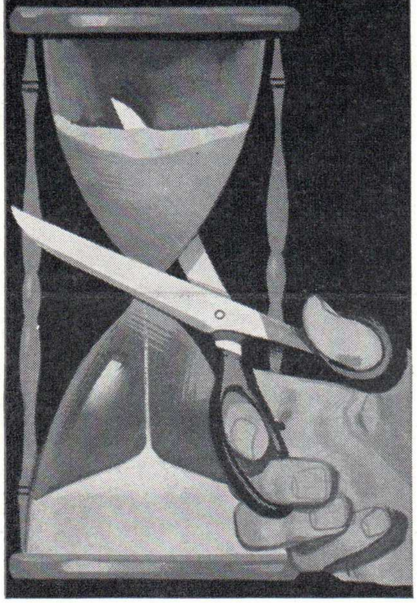

Helps speed your project. Eliminates confusion in choosing the right yoke.

Engineers have saved countless hours, many dollars and numerous headaches by using this simple Guide Sheet For Specifying Deflection Yokes.

Offered as a public service to engineers by SYNTRONIC INSTRUMENTS, INC., YOKE SPECIALISTS, the only firm devoted primarily to deflection yoke manufacture; therefore preeminently qualified to help you specify the correct yoke for your application. Complete line for every military and special purpose—in production quantities or custom designed to your specific requirement.

Phone our nearest rep. today for your Time-Saving Guide Sheet.

New York Area: Jules J. Bressler Co.
Phone: N.Y. OXford 5-0255;
N.J. UNion 4-9577
Philadelphia Area: Massey Associates
Phone: MOhawk 4-4200
Washington-Baltimore Area:
Massey Associates
Phone: GRanite 4-2071
Indianapolis: Joe Murphy
Phone: VIctor 6-0359
Los Angeles: Ash M. Wood Co.
Phone: CUmberland 3-1201

No obligation. We are glad to help you.

syntronic
INSTRUMENTS, INC.
100 Industrial Road, Addison, Illinois
Phone: KIngswood 3-6444

IRE People

(Continued from page 60A)

work. Under his supervision rapid advances were achieved in both research and engineering which led to large scale production of advanced radar systems and microwave devices of all types.

The Sperry scientist received the B.A. degree in 1932 and the M.A. in physics and electrical engineering in 1933 at the University of Missouri, Columbia. At Harvard he earned the M.S. degree in 1935 and a Doctor of Science degree in 1940, both in communications engineering.

Dr. Shepherd holds 15 radar and electronic patents. He holds membership in Tau Beta Pi, Phi Beta Kappa, Eta Kappa Nu, Sigma Xi, and American Institute of Electrical Engineers.

⁂

Dr. Sergei A. Schelkunoff (A'40–F'44), has been appointed professor of Electrical Engineering at Columbia University.

The appointment has been announced by Professor Ralph J. Schwarz, chairman of the Department of Electrical Engineering of the Columbia School of Engineering, who said that Dr. Schelkunoff will assume his duties at the University September 15. He has been an adjunct professor of Electrical Engineering at Columbia since 1958.

Dr. Schelkunoff was born in Russia, January 27, 1897. He received the Bachelor's degree from State College of Washington, Pullman, Wash., where he was awarded the Master's degree in mathematics in 1923. Columbia awarded him the Ph.D. degree in mathematics in 1928. He served in the engineering department of Western Electric Company in 1923–25, and in 1925–26 was a member of the technical staff of Bell Telephone Laboratories, Inc.

In 1926–27 he was an instructor in mathematics at State College, and served as an assistant professor of mathematics there from 1927 to 1929.

He returned to Bell Telephone Laboratories in 1929 as a member of the technical staff and became assistant director of mathematical research February 1, 1956. Since September 1, 1958, he has been assistant vice president of Bell Laboratories, at Murray Hill, N. J. He is the author of several scientific books and numerous scientific articles and papers.

Dr. Schelkunoff received the Liebmann Prize of the IRE in 1942 for mathematical contributions to the electromagnetic theory. In 1949 he was awarded the Ballantine Medal of the Franklin Institute for "outstanding research in communication and reconnaissance."

⁂

Dr. Eric A. Walker (M'47), president of the Pennsylvania State University, University Park, is the new president of the American Society for Engineering Education. He will serve for the year beginning in July, 1960.

(Continued on page 64A)

IRE SHOW
Reeves-Hoffman
REEVES Quality
FINEST in CRYSTAL FILTERS
OSCILLATORS
OVENS
CRYSTALS

"Sure I get it, but isn't this 'Thinking Man's Filter' routine a bit overdone?"

Maybe, but if you're a man thinking about filters, you'll find a wealth of information in Reeves-Hoffman Bulletin EWF/59-1, "Electric Wave Filters." Write for your copy now.

REEVES-HOFFMAN
DIVISION OF
DYNAMICS CORPORATION OF AMERICA
CARLISLE, PENNSYLVANIA
F/160

TUNG-SOL INDUSTRIAL ELECTRON TUBES

TYPE 7789

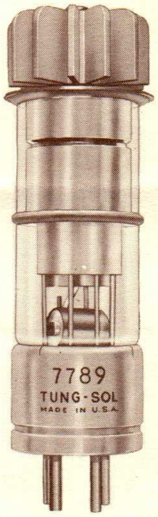

HYDROGEN DIODE

DESCRIPTION — The 7789 is an indirectly heated, hydrogen filled, half-wave diode designed for use in high-voltage rectifier circuits. The 7789 is a rugged diode that can handle higher voltage than comparable xenon-filled tubes, and is more efficient than vacuum rectifiers. An internally-connected hydrogen generator prevents gas clean-up.

Contrasted with a solid state rectifier, the 7789 can withstand high current and inverse voltage surges. This diode also has the advantage of being temperature free and has a wide range of mounting positions as compared with mercury-vapor tubes. The 7789 is capable of delivering 0.4 ampere average at 15 kilovolts peak inverse voltage.

ELECTRICAL DATA

	Min	Bogey	Max	
Heater Voltage	4.75	5.00	5.25	Volts
Heater Current — $E_f = 5.0$ Volts	7.7	8.5	9.3	Amperes
Cathode Heating Time	3	—	—	Minutes
Anode Voltage Drop	30	—	50	Volts
Initial Firing Voltage	—	—	70	Volts
Recurrent Firing Voltage	30	—	50	Volts

MECHANICAL DATA

Type of Cooling	Convection
Mounting Position	Horizontal or Vertical (Base Down)
Average Net Weight	12 Ounces
Dimensions	See Outline Drawing
Base	JEDEC A4-81
Anode Connection	See Outline Drawing

RATINGS, ABSOLUTE VALUES

	Minimum	Maximum	
Peak Inverse Anode Voltage	—	15,000	Volts
Cathode Current			
Peak	—	1.6	Amperes
Average	—	0.4	Ampere
Surge — Maximum Duration 0.1 Second	—	30	Amperes
Averaging Time	—	15	Seconds
Ambient Temperature	−55	+75	Degrees Centigrade

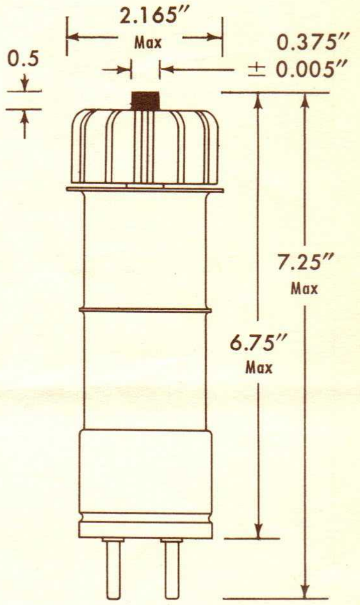

OUTLINE DRAWING

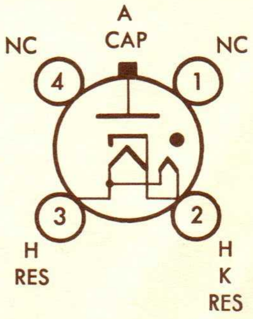

BASING DIAGRAM
BOTTOM VIEW

MAXIMUM RATING CHART

FIG.	CIRCUIT	TRANSFORMER	NO. OF TUBES	A-C SECONDARY VOLTAGE E_{RMS} VOLTS	D-C OUTPUT — APPROX		RIPPLE	
					E_{DC} VOLTS	I_{DC} AMPS	VOLTS RMS	FREQ
1	Half-wave 1-phase	1-phase	1	10,500	4,800	0.4	5,250	f
2	Full-wave 1-phase	1-phase C-T	2	5,250	4,800	0.8	2,250	2f
3	Bridge circuit 1-phase	1-phase	4	10,500	9,500	0.8	4,500	2f
4	Half-wave 3-phase	Delta-Wye	3	6,150	7,200	1.2	1,300	3f
5	Full-wave 3-phase	Delta-Wye	6	6,150	14,300	1.2	600	6f
6	Full-wave 3-phase	Delta-Delta	6	10,500	14,300	1.2	600	6f
7	Half-wave 6-phase (3-phase supply)	Delta-Star	6	5,250	7,200	2.4	290	6f

For figure references see STANDARD RECTIFIER CIRCUITS AND RATINGS sheet.

The 7789 should be protected from transient voltages in excess of the maximum rating by spark gaps installed either directly across the tube or across each plate transformer secondary leg.

TUNG-SOL INDUSTRIAL ELECTRON TUBES

TYPE 7790

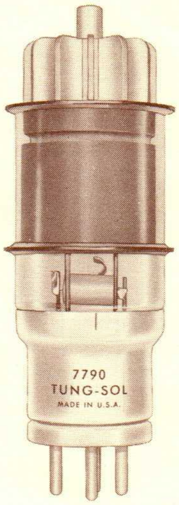

HYDROGEN DIODE

DESCRIPTION — The 7790 is an indirectly heated, hydrogen filled, half-wave diode designed for use in high-voltage rectifier circuits. The 7790 is a rugged diode that can handle higher voltage than comparable xenon-filled tubes, and is more efficient than vacuum rectifiers. An internally-connected hydrogen generator prevents gas clean-up.

Contrasted with a solid state rectifier, the 7790 can withstand high current and inverse voltage surges. This diode also has the advantage of being temperature free and has a wide range of mounting positions as compared with mercury-vapor tubes. The 7790 is capable of delivering 1.0 ampere average at 20 kilovolts peak inverse voltage.

In many cases the 7790 will function as a low impedance, direct replacement for the 576A vacuum rectifier tube.

ELECTRICAL DATA

	Min	Bogey	Max	
Heater Voltage	4.75	5.00	5.25	Volts
Heater Current — E_f = 5.0 Volts	9.5	11.0	12.5	Amperes
Cathode Heating Time	3	—	—	Minutes
Anode Voltage Drop	30	—	50	Volts
Initial Firing Voltage	—	—	70	Volts
Recurrent Firing Voltage	30	—	50	Volts

MECHANICAL DATA

Type of Cooling	See Rating Graph. Convection or Forced Air — 30 cfm directed at top of radiator
Mounting Position	Horizontal or Vertical (Base Down)
Average Net Weight	1 Pound 2 Ounces
Dimensions	See Outline Drawing
Base	JEDEC A4-107
Anode Connection	See Outline Drawing

NOTE: Always make POSITIVE connection to PIN 2.

RATINGS, ABSOLUTE VALUES

	Minimum	Maximum	
Peak Inverse Anode Voltage	—	20,000	Volts
Cathode Current			
Peak	—	4	Amperes
Average	—	1	Ampere
Surge — Maximum Duration 0.1 Second	—	30	Amperes
Averaging Time	—	15	Seconds
Ambient Temperature	−55	+75	Degrees Centigrade

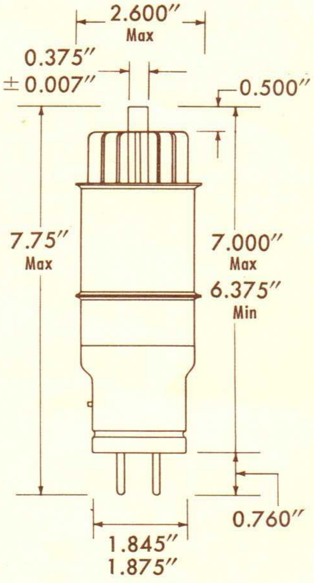

OUTLINE DRAWING

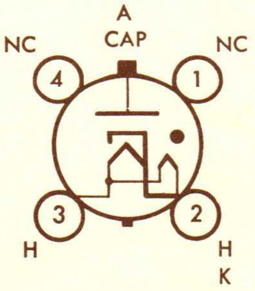

BASIC DIAGRAM
BOTTOM VIEW

MAXIMUM RATING CHART FOR INFINITE INDUCTANCE CHOKE INPUT FILTER

FIG.	CIRCUIT	TRANSFORMER	NO. OF TUBES	*	A-C SECONDARY VOLTAGE E_{RMS} KILOVOLTS	D-C OUTPUT—APPROX		RIPPLE	
						E_{DC} KILOVOLTS	I_{DC} AMPS	KILOVOLTS RMS	FREQ
1	Half-wave 1-phase	1-phase	1	A B	11.0 14.0	5.0 6.4	1.0 1.0	5.50 7.00	f
2	Full-wave 1-phase	1-phase C-T	2	A B	5.5 7.0	5.5 6.4	2.0 2.0	2.30 3.00	2f
3	Bridge circuit 1-phase	1-phase	4	A B	11.3 14.0	10.0 12.8	2.0 2.0	4.70 6.00	2f
4	Half-wave 3-phase	Delta-Wye	3	A B	6.5 8.0	7.5 9.5	3.0 3.0	1.50 1.70	3f
5	Full-wave 3-phase	Delta-Wye	6	A B	6.5 8.0	15.0 19.0	3.0 3.0	0.60 0.80	6f
6	Full-wave 3-phase	Delta-Delta	6	A B	11.0 14.0	15.0 19.0	3.0 3.0	0.60 0.76	6f

* See RATING GRAPH

A: Convection cooling at maximum current rating.

B: Forced air cooling at maximum voltage and current rating.

For figure references see STANDARD RECTIFIER CIRCUITS AND RATINGS sheet.

The 7790 should be protected from transient voltages in excess of the maximum rating by spark gaps installed either directly across the tube or across each plate transformer secondary leg.

RATING GRAPH

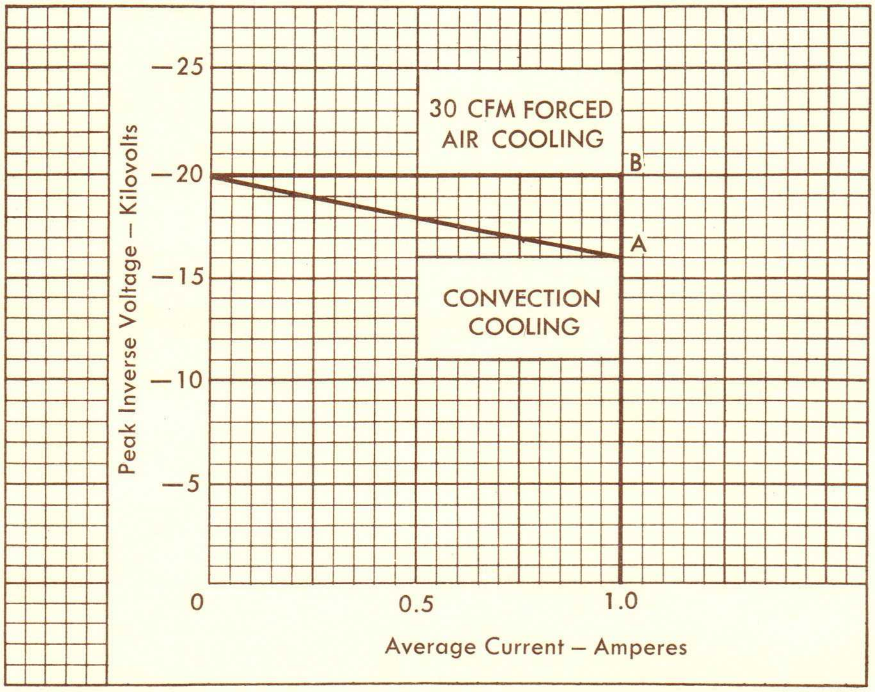

TUNG-SOL INDUSTRIAL ELECTRON TUBES

TYPE 7791

HYDROGEN DIODE

DESCRIPTION—The 7791 is an indirectly heated, hydrogen filled, half-wave diode designed for use in high-voltage rectifier circuits. The 7791 is a rugged diode that can handle higher voltage than comparable xenon-filled tubes, and is more efficient than vacuum rectifiers. An internally-connected hydrogen generator prevents gas clean-up.

Contrasted with a solid state rectifier, the 7791 can withstand high current and inverse voltage surges. This diode also has the advantage of being temperature free and has a wide range of mounting positions as compared with mercury-vapor tubes. The 7791 is capable of delivering 2.0 amperes average and withstanding 25 kilovolts peak inverse voltage as shown on rating graph.

The 7791 employs flange mounting for minimum overall height consistent with good electrical connections and ease of installation.

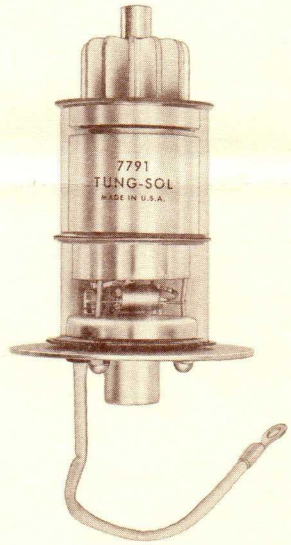

ELECTRICAL DATA

	Min	Bogey	Max	
Heater Voltage	4.75	5.0	5.25	Volts
Heater Current — E_f = 5.0 Volts	13	15	17	Amperes
Cathode Heating Time	3	—	—	Minutes
Anode Voltage Drop	30	—	60	Volts
Initial Firing Voltage	—	—	100	Volts
Recurrent Firing Voltage	30	—	75	Volts

MECHANICAL DATA

Type of Cooling	See Rating Graph. Convection or Forced Air — 50 cfm directed at top of radiator
Mounting Position	Horizontal or Vertical (Base Down)
Average Net Weight	1 Pound 13 Ounces
Dimensions	See Outline Drawing
Mounting Data	See Mounting Data Drawing
Anode Connection	See Outline Drawing
Heater Connection	7 ± ½-inch long lead with lug for ¼-inch diameter screw

NOTE: Always make POSITIVE connection to BASE PLATE.

RATINGS, ABSOLUTE VALUES

	Minimum	Maximum	
Peak Inverse Anode Voltage	—	25,000	Volts
Cathode Current			
Peak	—	8	Amperes
Average	—	2	Amperes
Surge — Maximum Duration 0.1 Second	—	60	Amperes
Averaging Time	—	15	Seconds
Ambient Temperature	−55	+75	Degrees Centigrade

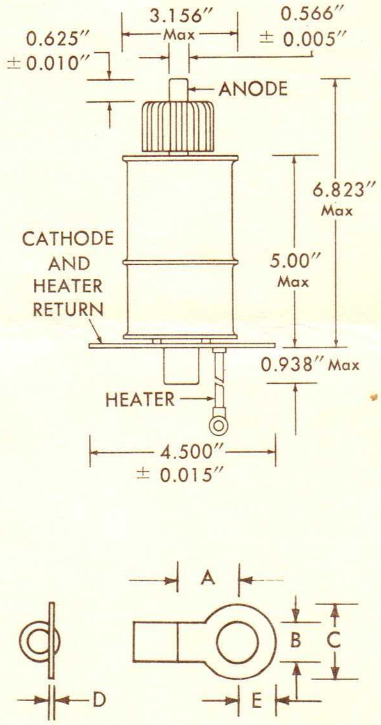

Symbol	Dimension
A	0.380″ MIN
B	0.260″ – 0.313″
C	0.605″ MAX
D	0.04″ MIN
E	0.305″ MAX

OUTLINE DRAWING

MAXIMUM RATING CHART FOR INFINITE INDUCTANCE CHOKE INPUT FILTER

FIG.	CIRCUIT	TRANSFORMER	NO. OF TUBES	*	A-C SECONDARY VOLTAGE	D-C OUTPUT — APPROX		RIPPLE	
					E_{RMS} Kilovolts	E_{DC} Kilovolts	I_{DC} AMPS	KILOVOLTS RMS	FREQ
1	Half-wave 1-phase	1-phase	1	A	7.10	3.20	1.75	3.50	f
				B	14.20	4.80	1.00	5.25	
				C	14.20	4.80	2.00	5.25	
				D	17.50	8.00	1.00	8.75	
2	Full-wave 1-phase	1-phase C-T	2	A	3.55	3.20	3.50	1.50	2f
				B	7.10	4.80	2.00	2.25	
				C	7.10	4.80	4.00	2.25	
				D	8.80	8.00	2.00	3.75	
3	Bridge circuit 1-phase	1-phase	4	A	7.10	6.40	3.50	3.00	2f
				B	14.20	9.60	2.00	4.50	
				C	14.20	9.60	4.00	4.50	
				D	17.50	16.00	2.00	7.50	
4	Half-wave 3-phase	Delta-Wye	3	A	4.10	4.80	5.25	0.85	3f
				B	8.20	7.20	3.00	1.30	
				C	8.20	7.20	6.00	1.30	
				D	10.00	12.00	3.00	2.30	
5	Full-wave 3-phase	Delta-Wye	6	A	4.10	9.50	5.25	0.40	6f
				B	8.20	14.25	3.00	0.60	
				C	8.20	14.25	6.00	0.60	
				D	10.00	23.75	3.00	1.15	
6	Full-wave 3-phase	Delta-Delta	6	A	7.10	9.50	5.25	0.40	6f
				B	14.20	14.25	3.00	0.60	
				C	14.20	14.25	6.00	0.60	
				D	17.50	23.75	3.00	1.15	

*See RATING GRAPH

A: Convection cooled at maximum current rating.
B: Convection cooled at maximum voltage rating.
C: Forced air cooled at maximum current rating.
D: Forced air cooled at maximum voltage rating.

For figure references see STANDARD RECTIFIER CIRCUITS AND RATINGS sheet.

The 7791 should be protected from transient voltages in excess of the maximum rating by spark gaps installed either directly across the tube or across each plate transformer secondary leg.

RATING GRAPH

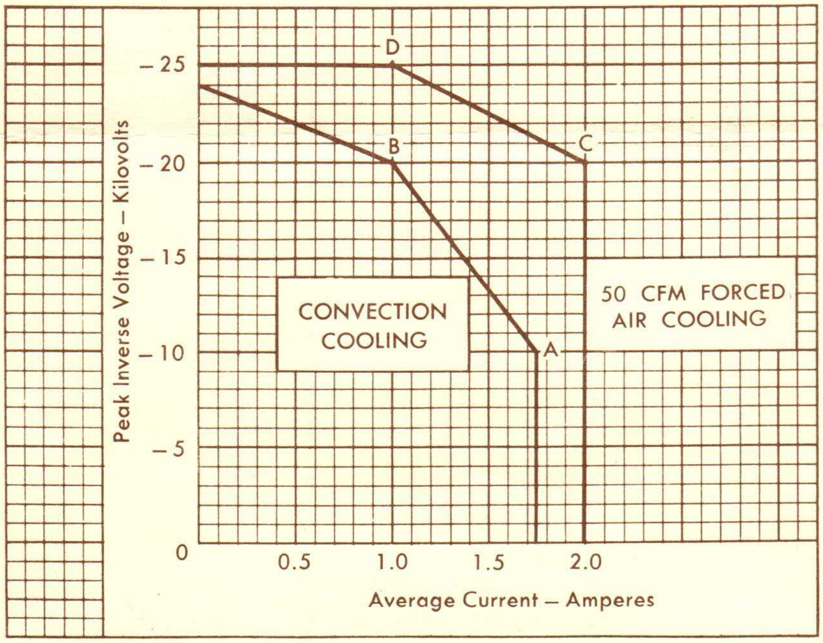

MOUNTING DATA

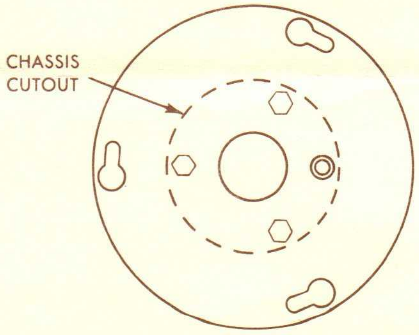

NOTES

1. 2.625 inch minimum diameter mounting hole required.
2. Three mounting slots for 0.50 inch maximum head ¼-inch screws spaced 120 degrees on 3.750 ± 0.010 inch diameter circle.

TUNG-SOL

PRODUCT BULLETIN

INDUSTRIAL ELECTRON TUBE TYPE 7792

JUNE 1962

HYDROGEN DIODE

DESCRIPTION — The 7792 is an indirectly heated, hydrogen filled, half-wave diode designed for use in high-voltage rectifier circuits. The 7792 is a rugged diode that can handle higher voltage than comparable xenon-filled tubes, and is more efficient than vacuum rectifiers. An internally-connected hydrogen generator prevents gas clean-up.

Contrasted with a solid state rectifier, the 7792 can withstand high current and inverse voltage surges. This diode also has the advantage of being temperature free and has a wide range of mounting positions as compared with mercury-vapor tubes. The 7792 is capable of delivering 2.0 amperes average at 25 kilovolts peak inverse voltage.

In many cases, the 7792 will function as a low impedance, direct plug-in replacement for the X80 vacuum rectifier tube.

7792
TUNG-SOL
MADE IN U.S.A.

ELECTRICAL DATA

	Min	Bogey	Max	
Heater Voltage	11.0	11.5	12.0	Volts
Heater Current — $E_f = 11.5$ Volts	6.9	8.5	10.5	Amperes
Cathode Heating Time	3	—	—	Minutes
Anode Voltage Drop	30	—	60	Volts
Initial Firing Voltage	—	—	100	Volts
Recurrent Firing Voltage	30	—	75	Volts

MECHANICAL DATA

Type of Cooling	See Rating Graph. Convection or Forced Air — 50 cfm directed at top of radiator
Mounting Position	Horizontal or Vertical (Base Down)
Average Net Weight	1 Pound 14 Ounces
Dimensions	See Outline Drawing
Base	Super Jumbo, 4-pin With Bayonet, JEDEC A4-106
Anode Connection	Cap, See Outline Drawing

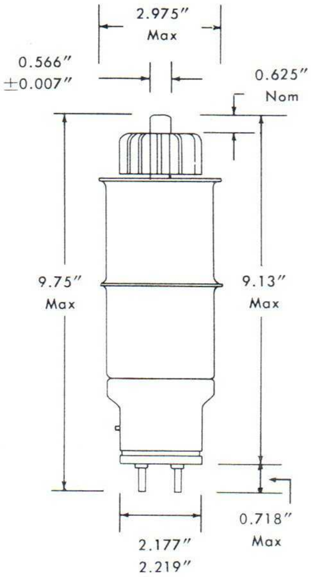

RATINGS, ABSOLUTE VALUES

	Minimum	Maximum	
Peak Inverse Anode Voltage	—	25,000	Volts
Cathode Current			
Peak	—	8	Amperes
Average	—	2	Amperes
Surge — Maximum Duration 0.1 Second	—	60	Amperes
Averaging Time	—	15	Seconds
Ambient Temperature	—55	+75	Degrees Centigrade

CAUTION — The Cathode connection should be made to Pin 2 in order not to damage tube.

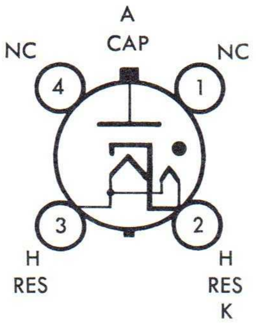

(SEE CAUTION NOTE)

BOTTOM VIEW

MAXIMUM RATING CHART

FIG.	CIRCUIT	TRANSFORMER	NO. OF TUBES	*	A-C SECONDARY VOLTAGE E_{RMS} Kilovolts	D-C OUTPUT — APPROX		RIPPLE	
						E_{DC} Kilovolts	I_{DC} AMPS	KILOVOLTS RMS	FREQ
1	Half-wave 1-phase	1-phase	1	A	10.5	4.75	1.5	5.25	f
				B	17.5	8.0	1.0	8.8	
				C	12.5	5.75	2.0	6.25	
2	Full-wave 1-phase	1-phase C-T	2	A	5.25	4.75	3.0	2.25	2f
				B	8.8	8.0	2.0	3.75	
				C	6.25	5.75	4.0	2.8	
3	Bridge circuit 1-phase	1-phase	4	A	10.5	9.5	3.0	4.5	2f
				B	17.5	15.8	2.0	7.5	
				C	12.5	11.5	4.0	5.6	
4	Half-wave 3-phase	Delta-Wye	3	A	6.15	7.2	4.5	1.3	3f
				B	10.0	12.0	3.0	2.2	
				C	7.35	8.6	6.0	1.55	
5	Full-wave 3-phase	Delta-Wye	6	A	6.15	14.3	4.5	0.6	6f
				B	10.0	23.9	3.0	1.0	
				C	7.35	17.2	6.0	0.72	
6	Full-wave 3-phase	Delta-Delta	6	A	10.5	14.3	4.5	0.6	6f
				B	17.5	23.9	3.0	1.0	
				C	12.5	17.2	6.0	0.72	
7	Half-wave 6-phase (3-phase supply)	Delta-Star	6	A	5.25	7.2	9.0	0.29	6f
				B	8.8	12.0	6.0	0.48	
				C	6.25	8.6	12.0	0.35	

*See RATING GRAPH
A: Convection cooled, at maximum tube ratings
B: Forced air cooled at maximum voltage ratings
C: Forced air cooled at maximum current ratings

For figure references see STANDARD RECTIFIER CIRCUITS AND RATINGS sheet.

The 7792 should be protected from transient voltages in excess of the maximum rating by spark gaps installed either directly across the tube or across each plate transformer secondary leg.

RATING GRAPH

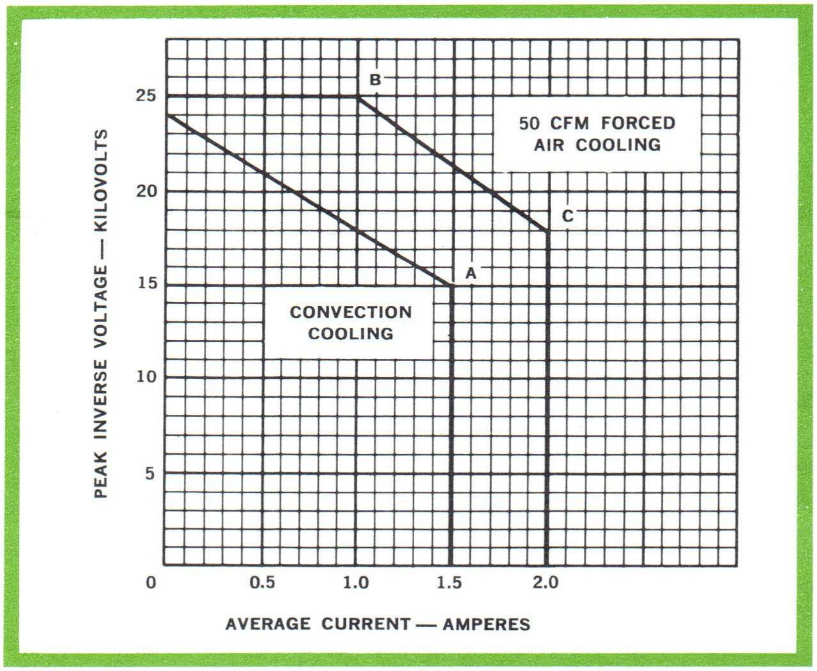

OBJECTIVE DATA

7793

HYDROGEN DIODE

The 7793 is an indirectly heated, hydrogen filled, half-wave diode designed for use in high-voltage rectifier, clipper, backswing diode and charging diode applications. The 7793 is a rugged diode that can handle higher voltage than comparable xenon-filled tubes, and is more efficient than vacuum rectifiers. An externally connected reservoir promotes stable operation and long life by replentishing hydrogen lost by cleanup.

Contrasted with a solid state rectifier, the 7793 can withstand high current and inverse voltage surges. This diode has the advantage of being temperature free and has a wide range of mounting positions as compared with mercury vapor tubes.

ELECTRICAL DATA

	Min	Bogey	Max	
Heater Voltage	4.75	5.0	5.25	Volts
Heater Current - Ef=5.0 Volts	18	-	25	Amperes
Reservoir Voltage	4.75	-	5.25	Volts
Reservoir Current - Ef=5.0 Volts	3	-	5	Amperes
Cathode and Reservoir Heating Time	3	-	-	Minutes
Anode Voltage Drop	-	-	70	Volts
Initial Firing Voltage	-	-	100	Volts
Recurrent Firing Voltage	-	-	90	Volts

MECHANICAL DATA

Type of Cooling	Convection or forced air
Mounting Position	Horizontal or vertical, base down
Average Net Weight	3 pounds
Dimensions, Mounting and Terminations	See drawings

Issue 1 8/16/62

RATINGS - ABSOLUTE VALUES
RECTIFIER SERVICE

	Min	Max	
Peak Inverse Anode Voltage	-	25,000	Volts
Cathode Current			
Peak	-	16	Amperes
Average	-	4	Amperes
Fault - Maximum Duration 0.1 Second	-	90	Amperes
Ambient Temperature	-55	+90	Degrees Centigrade

NOTE: Clipper, backswing and charging diode ratings have not as yet been established.

	INCHES	
SYMBOL	MIN	MAX
A	-	4.010
B	-	5.625
C	-	4.925
D	0.125	Nominal
E	-	1.0
F	7.5	8.5
G	5.940	6.060

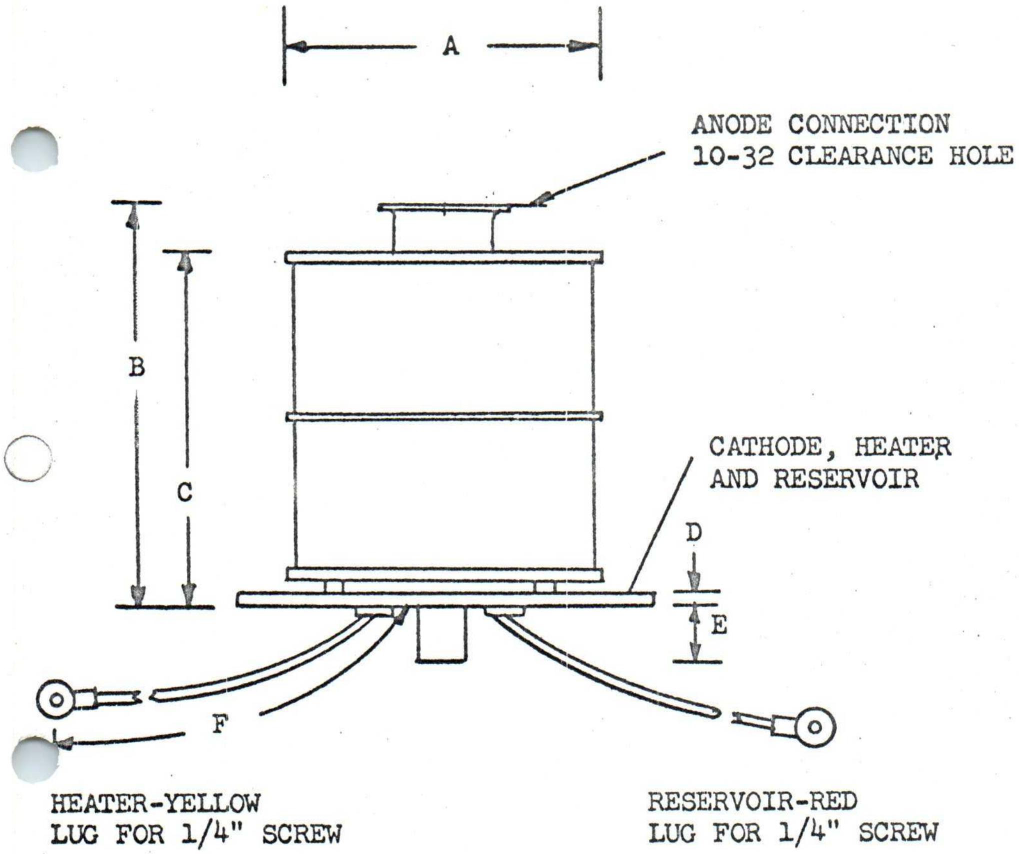
A
ANODE CONNECTION
10-32 CLEARANCE HOLE
B
C
CATHODE, HEATER
AND RESERVOIR
D
E
F
HEATER-YELLOW
LUG FOR 1/4" SCREW
RESERVOIR-RED
LUG FOR 1/4" SCREW

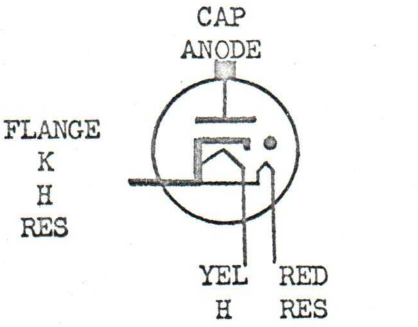
CAP
ANODE
FLANGE
K
H
RES
YEL
H
RED
RES

ALWAYS MAKE POSITIVE
CONNECTION TO FLANGE

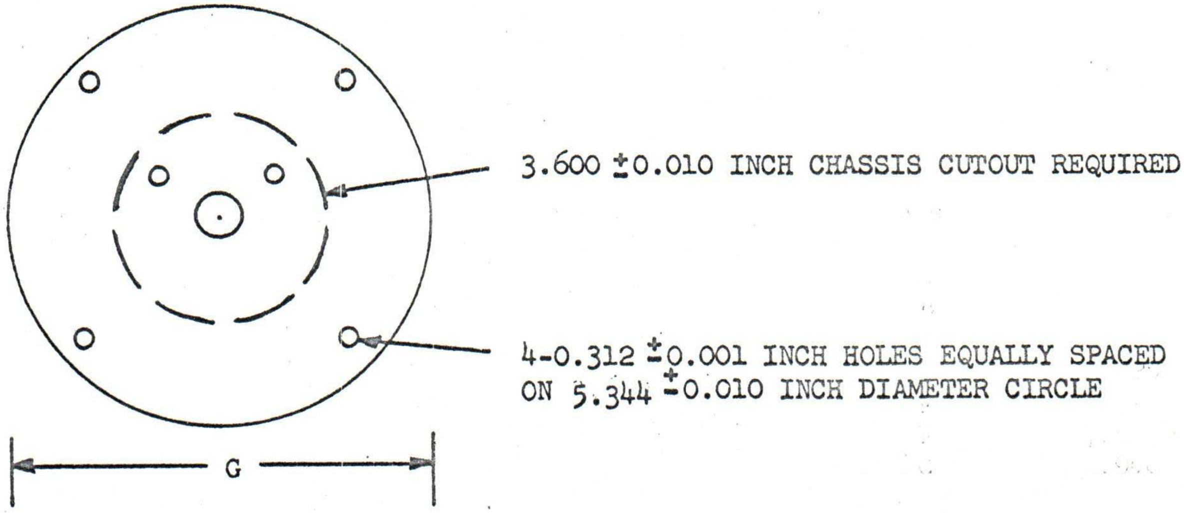
3.600 ±0.010 INCH CHASSIS CUTOUT REQUIRED
4-0.312 ±0.001 INCH HOLES EQUALLY SPACED
ON 5.344 ±0.010 INCH DIAMETER CIRCLE
G

TUNG-SOL

PRODUCT BULLETIN

INDUSTRIAL ELECTRON TUBE TYPE 8149

FEBRUARY, 1963

BEAM POWER VHF PENTODE

DESCRIPTION—The 8149 is a beam power amplifier pentode in the single-ended T-12 compactron design. It is intended for use as an RF power amplifier and oscillator at frequencies up to 175 megacycles, with a maximum plate dissipation rating of 35 watts under ICAS conditions. It features a center-tapped heater so it may be operated from either a 3-cell or a 6-cell storage battery system.

A similar tube in a double-ended design is registered as type 8150.

MECHANICAL DATA

Cathode	Coated Unipotential	
Outline	JEDEC 12-57	
Maximum Diameter	1.563	Inches
Maximum Seated Height	2.750	Inches
Maximum Overall Length	3.125	Inches
Bulb	T-12	Glass
Base — Button 12 Pin	JED E12-74	

Pin Connections

Basing Diagram JEDEC 12DT

Pin 1 — Heater end B
Pin 2 — Cathode, Grid 3, Internal Shield
Pin 3 — Cathode, Grid 3, Internal Shield
Pin 4 — Grid 2
Pin 5, 6, and 7 — Plate, Use All 3 Pins
Pin 8 — Grid 2
Pin 9 — Cathode, Grid 3, Internal Shield
Pin 10 — Grid 1
Pin 11 — Heater Center Tap
Pin 12 — Heater End A

Mounting Position .... Any

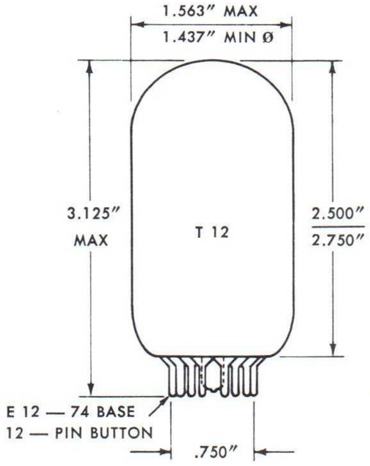

CIRCLE OF PIN CENTERS

Ø MINIMUM DIAMETER DOES NOT APPLY IN THE AREA OF THE SEAL.

OUTLINE DRAWING

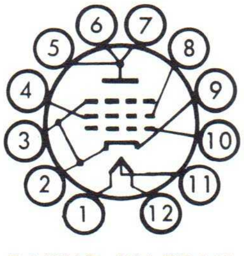

BASING DIAGRAM BOTTOM VIEW

ELECTRICAL DATA

Heater Characteristics and Ratings — Absolute Maximum System — See EIA Standard RS-239

Supply Connected to Pins	1 and 12	11 and 1 + 12	
Average Values — Voltage	13.0	6.5	Volts
Average Values — Current	0.60	1.20	Amps
Limits of Applied Heater Voltage	11.0-15.0	5.5-7.5	Volts
Maximum Heater-Cathode Voltage Either Polarity		135	Volts

Direct Interelectrode Capacitances — without external shield

Grid 1 to Plate: g1 to p	0.35	pf
Input: g1 to (h + k + g2 + g3 + i.s)	13.0	pf
Output: p to (h + k + g2 + g3 + i.s)	6.0	pf

Average Static Characteristics

Plate Voltage	200	Volts
Grid 2 Voltage	200	Volts
Plate Current	100	mA
Transconductance	7500	μmhos
Amplification Factor, Triode Connected	4.5	

Maximum Ratings — Absolute Maximum System — See EIA Standard RS-239 ICAS — Intermittent Commercial and Amateur Service

RF Power Amplifier and Oscillator — Class C Telegraphy

RF Power Amplifier — Class C FM Telephony

For Frequencies up to	60	175	Mc/s
Plate Voltage-DC	750	450	Volts
Grid 2 Voltage	250	250	Volts
Grid 1 Voltage-DC	−150	−150	Volts
Cathode Current-DC	220	220	mA
Plate Dissipation	35	35	Watts
Grid 2 Dissipation	3.3	3.3	Watts
Bulb Temperature	240	240	°C

For Voltage vs Frequency Rating Chart See Page 3.

Typical Operation — Class C Amplifier at 175 Mc/s

Plate Voltage	380	Volts
Grid 2 Supply Voltage	380	Volts
Grid 2 Dropping Resistor	10k	Ohms
Grid 1 Voltage	−78	Volts
from Grid 1 Resistor	27k	Ohms
Additional Fixed Bias	−24	Volts
Peak R.F. Grid 1 Voltage	120	Volts
Plate Current	180	mA
Grid 2 Current	12	mA
Grid 1 Current	2.0	mA
Driving Power — Approx.	2	Watts
Power Output	40	Watts

RATING CHART

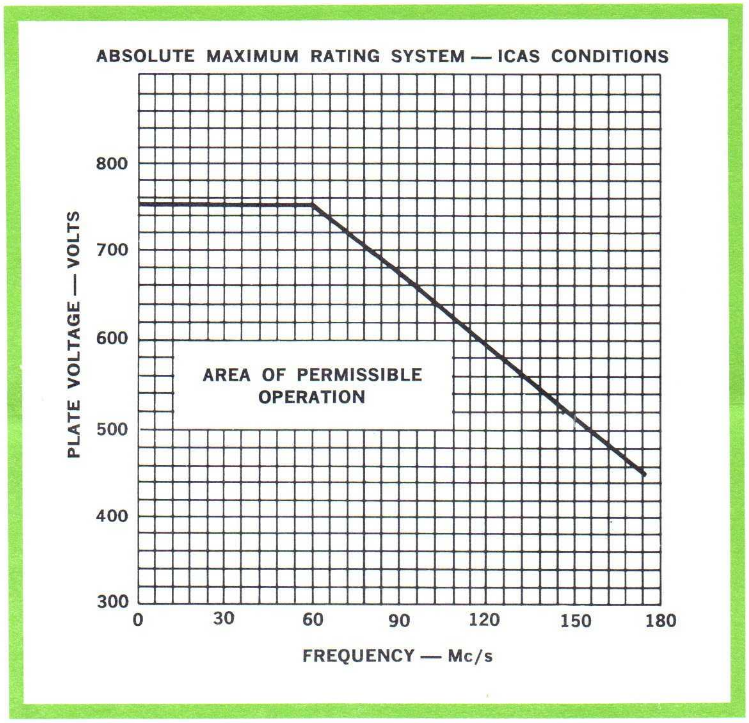

CHARACTERISTIC CURVES

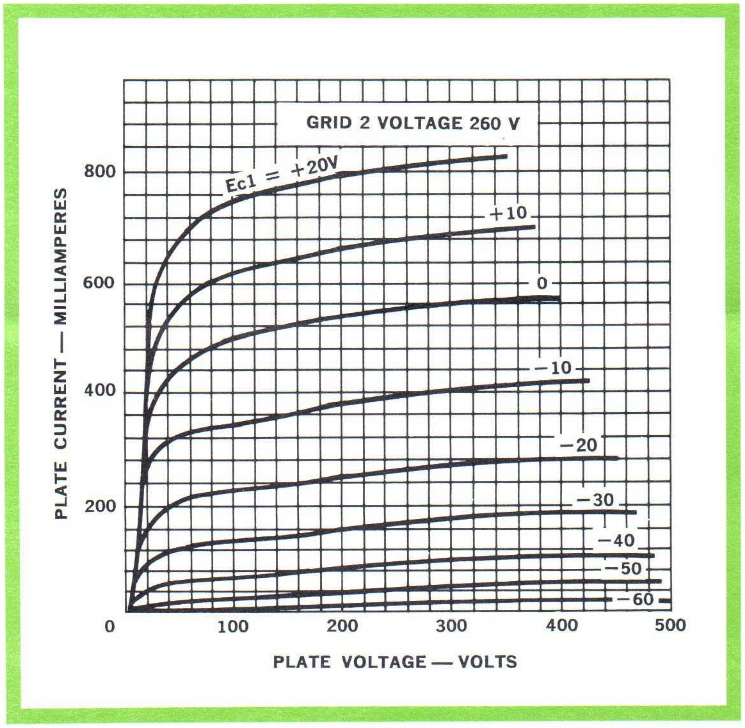

CHARACTERISTIC CURVES

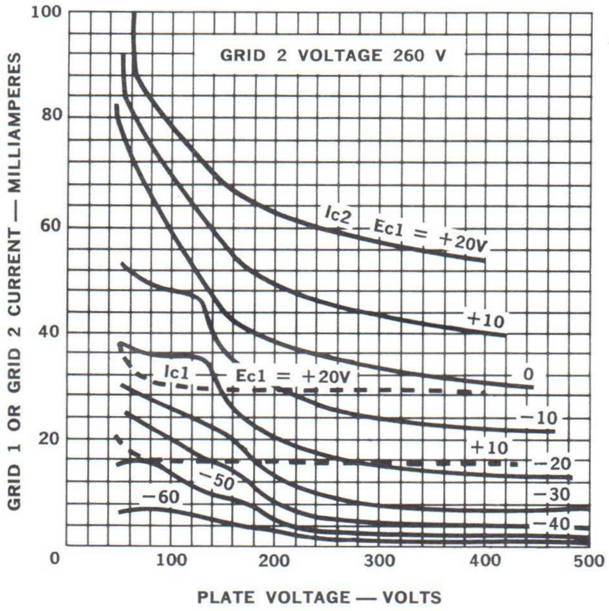

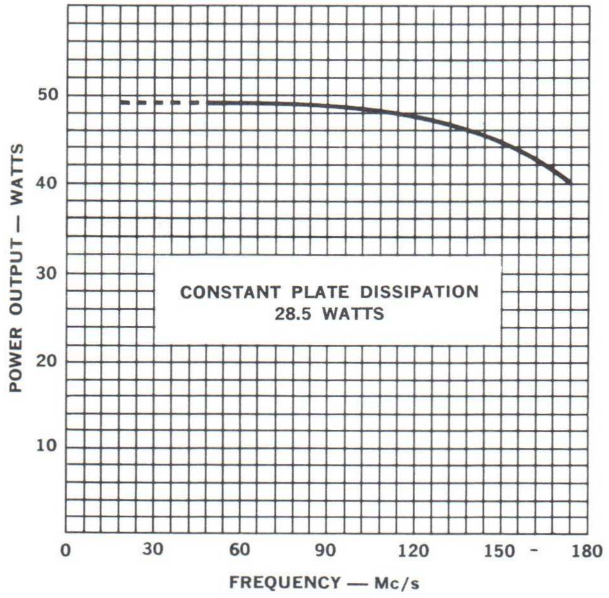

TUNG-SOL

PRODUCT BULLETIN

INDUSTRIAL
ELECTRON
TUBE
TYPE 8150
FEBRUARY, 1963

BEAM POWER VHF PENTODE

DESCRIPTION—The 8150 is a beam power amplifier pentode in the double-ended T-12 compactron design. It is intended for use as an RF power amplifier and oscillator at frequencies up to 175 megacycles, with a maximum plate dissipation rating of 35 watts under ICAS conditions. It features a center-tapped heater so it may be operated from either a 3-cell or a 6-cell storage battery system.

A similar tube in a single-ended design is registered as type 8149.

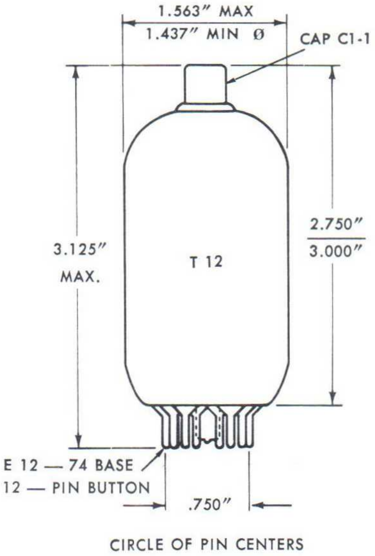

Ø MINIMUM DIAMETER DOES NOT APPLY IN THE AREA OF THE SEAL.

OUTLINE DRAWING

MECHANICAL DATA

Cathode	Coated Unipotential	
Outline	JEDEC 12-86	
Maximum Diameter	1.563	Inches
Maximum Seated Height	3.000	Inches
Maximum Overall Length	3.375	Inches
Bulb	T-12	Glass
Base — Button 12 Pin	JEDEC E12-74	
Cap — Small	JEDEC C 1-1	

Pin Connections — Basing Diagram JEDEC 12DU

Pin 1 — Heater End B
Pin 2 — Cathode, Grid 3, Internal Shield
Pin 3 — Internal Connection, Do Not Use
Pin 4 — Cathode, Grid 3, Internal Shield
Pin 5 — Grid 2
Pin 6 — Cathode, Grid 3, Internal Shield
Pin 7 — No Connection
Pin 8 — Grid 2
Pin 9 — Cathode, grid 3, Internal Shield
Pin 10 — Grid 1
Pin 11 — Heater Center Tap
Pin 12 — Heater End A
Top Cap — Plate

Mounting Position .... Any

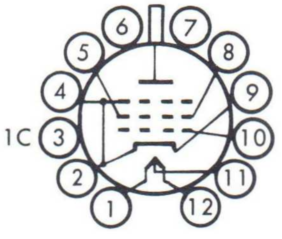

BASING DIAGRAM BOTTOM VIEW

ELECTRICAL DATA

Heater Characteristics and Ratings — Absolute Maximum System — See EIA Standard RS-239

Supply Connected to Pins	1 and 12	11 and 1 + 12	
Average Values — Voltage	13.0	6.5	Volts
Average Values — Current	0.60	1.20	Amps
Limits of Applied Heater Voltage	11.0-15.0	5.5-7.5	Volts
Maximum Heater-Cathode Voltage Either Polarity		135	Volts

Direct Interelectrode Capacitances — Without External Shield

Grid 1 to Plate: g1 to p	0.2	pf
Input: g1 to (h + k + g2 + g3 + i.s)	13.0	pf
Output: p to (h + k + g2 + g3 + i.s)	6.5	pf

Average Static Characteristics

Plate Voltage	200	Volts
Grid 2 Voltage	200	Volts
Plate Current	100	mA
Transconductance	7500	μmhos
Amplification Factor, Triode Connected	4.5	

Maximum Ratings — Absolute Maximum System — See EIA Standard RS-239 ICAS — Intermittent Commercial and Amateur Service

RF Power Amplifier and Oscillator — Class C Telegraphy

RF Power Amplifier — Class C FM Telephony

For Frequencies Up to	60	175	Mc/s
Plate Voltage-DC	750	450	Volts
Grid 2 Voltage	250	250	Volts
Grid .1 Voltage-DC	−150	−150	Volts
Cathode Current-DC	220	220	mA
Plate Dissipation	35	35	Watts
Grid 2 Dissipation	3.3	3.3	Watts
Bulb Temperature	240	240	°C

For Voltage vs Frequency Rating Chart See Page 3.

Typical Operation — Class C Amplifier at 175 Mc/s

Plate Voltage	380	Volts
Grid 2 Supply Voltage	380	Volts
Grid 2 Dropping Resistor	10k	Ohms
Grid 1 Voltage	−78	Volts
from Grid 1 Resistor	27k	Ohms
Additional Fixed Bias	−24	Volts
Peak R.F. Grid 1 Voltage	120	Volts
Plate Current	180	mA
Grid 2 Current	12	mA
Grid 1 Current	2.0	mA
Driving Power — Approx.	2	Watts
Power Output	40	Watts

RATING CHART

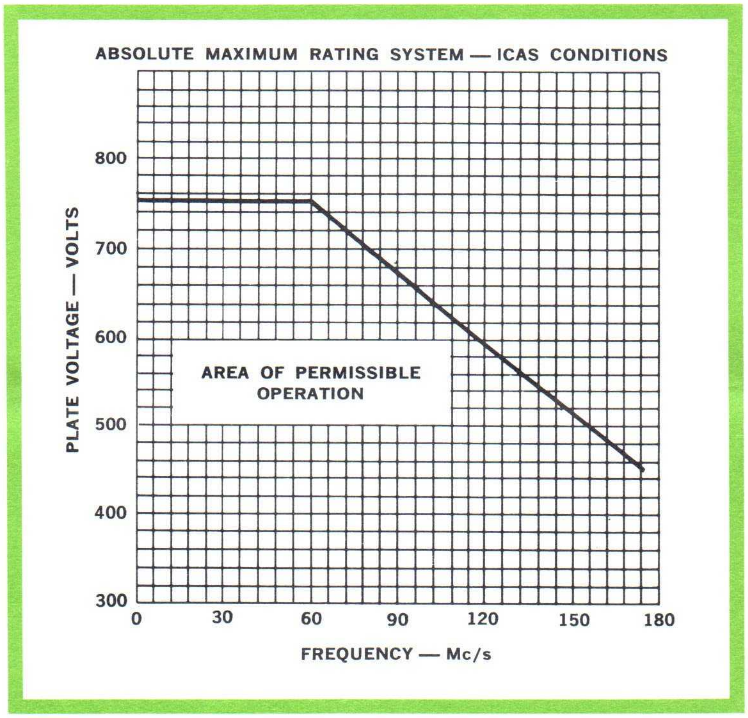

CHARACTERISTIC CURVES

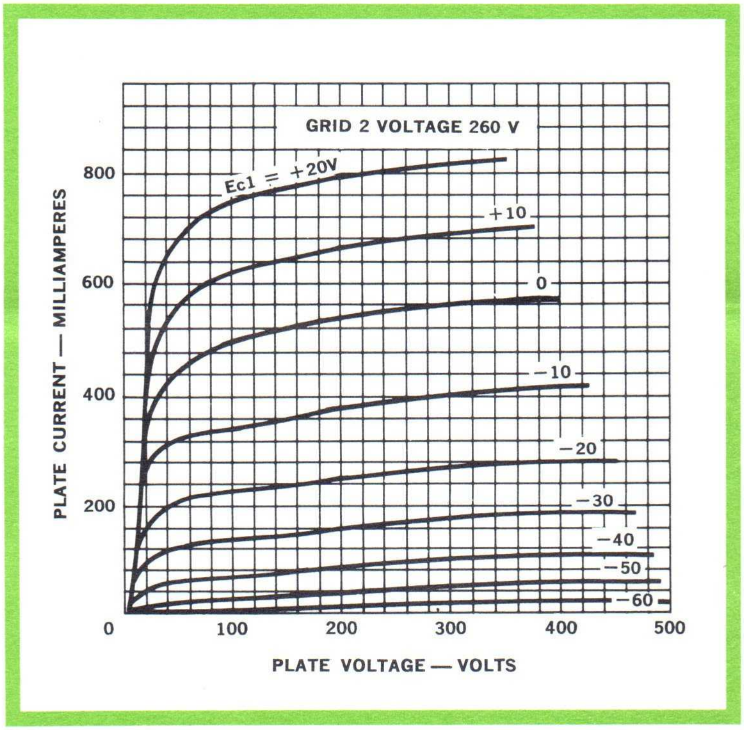

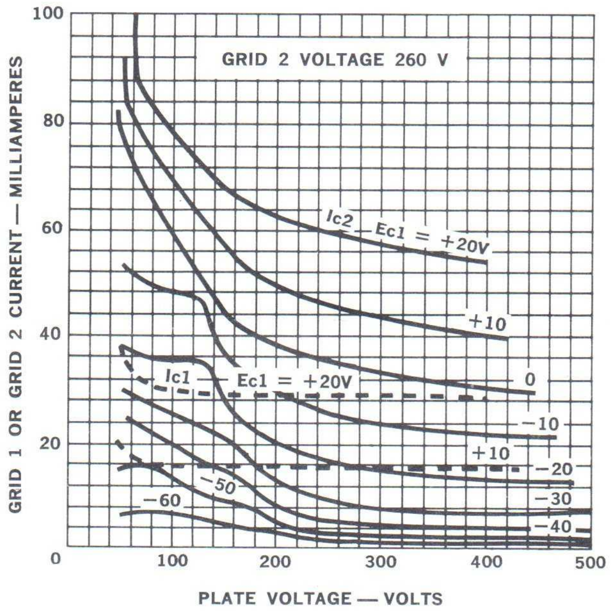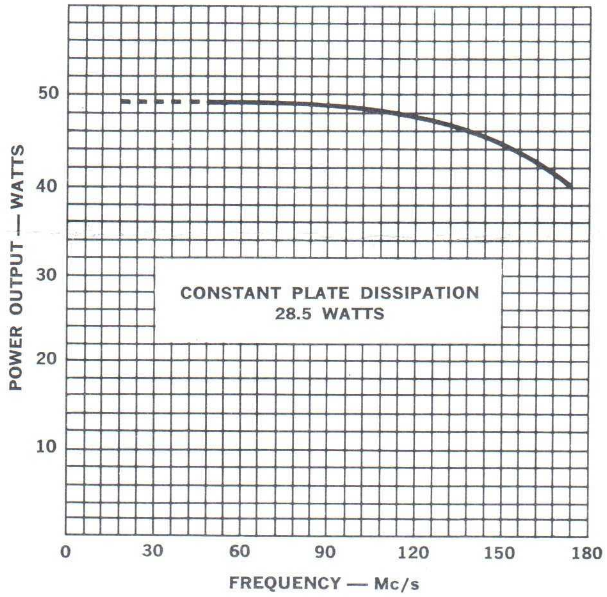CHARACTERISTIC CURVES