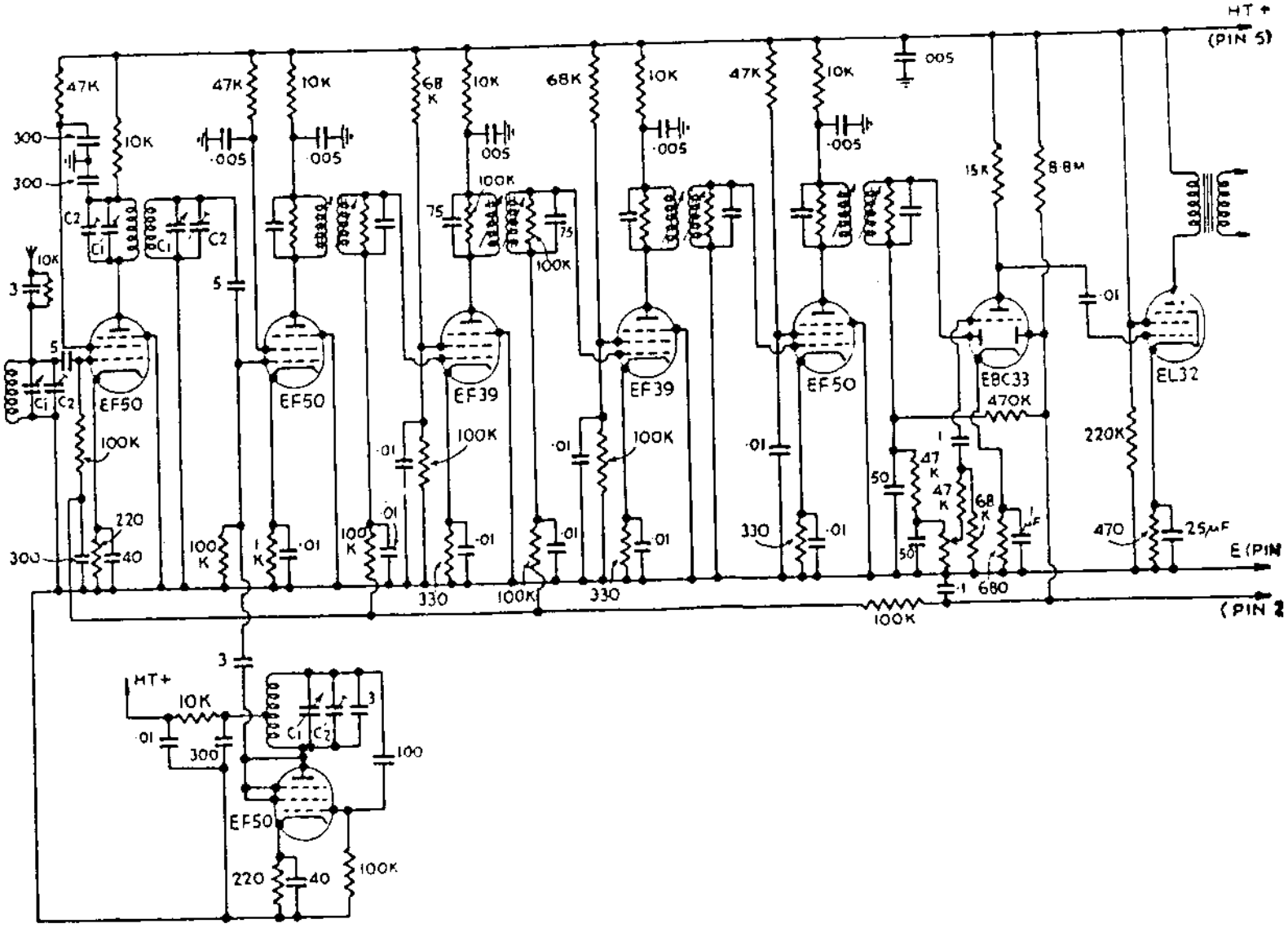
HT +
(PIN 5)
47K
10K
300
300
C2
C1
10K
3
5
EF50
100K
220
40
300
47K
10K
·005
·005
5
EF50
100
K
1
K
·01
100
K
·01
68
K
10K
·005
100K
75
75
100K
EF39
100K
·01
·01
330
·01
100K
68K
10K
·005
·01
100K
EF39
·01
330
·01
47K
10K
·005
·01
330
·01
EF50
005
15K
8·8M
·01
EBC33
470K
50
47
K
47
K
68
K
1
μF
50
·1
680
220K
470
25μF
EL32
E (PIN
100K
(PIN 2
3
HT+
10K
·01
300
C1
C2
3
100
EF50
220
40
100K

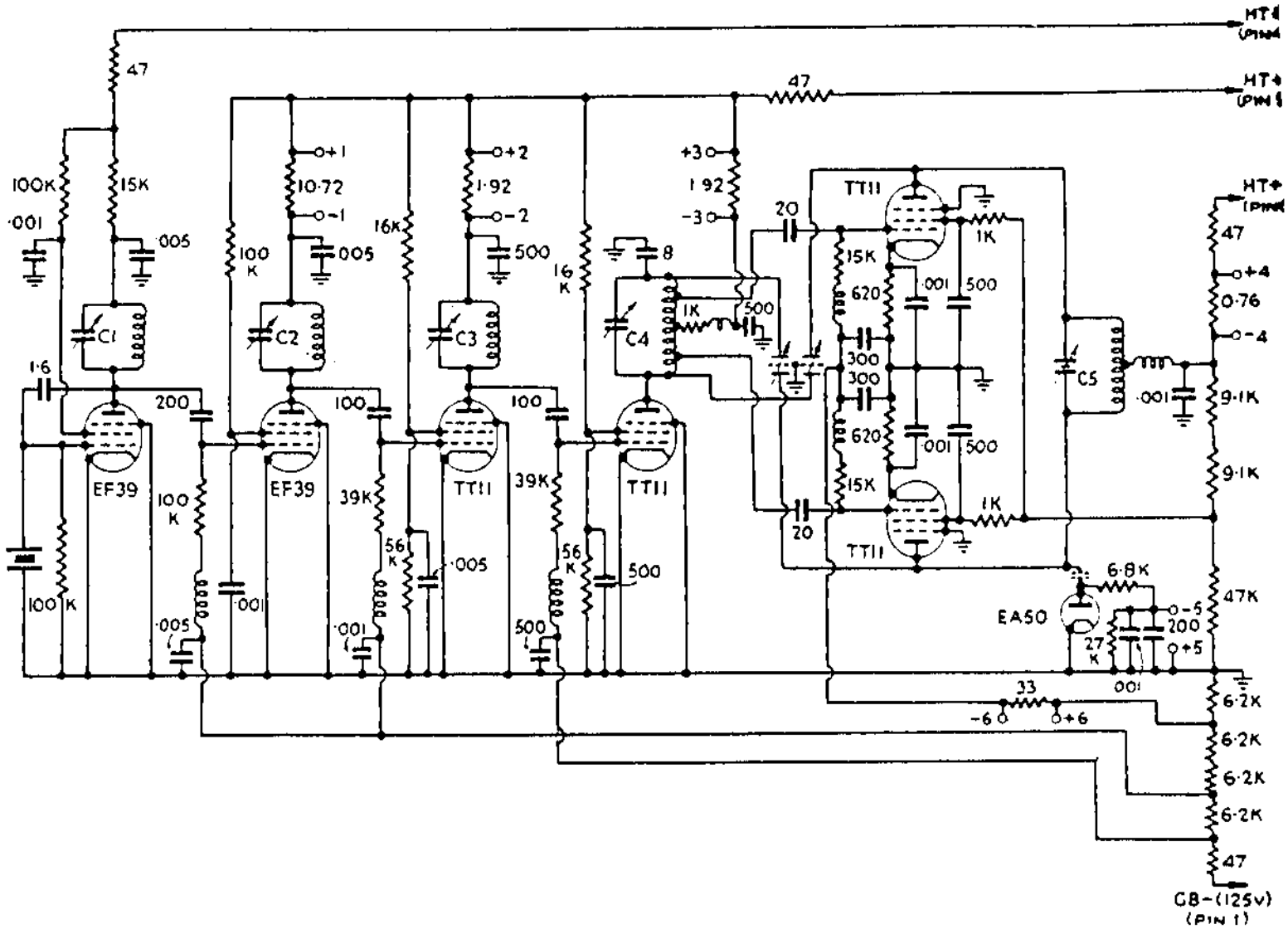

Fig. 1.

Circuit of the Transmitter Unit (Type 17). Capacities are all in $\mu\mu$F or μF, and resistances in ohms or kilohms. C1, C2 and C3 are 3·2–20 $\mu\mu$F, C4, 3·2–9·1 $\mu\mu$F, and C5, 2·8–6·1 $\mu\mu$F.